GALLEON
Installation Instructions

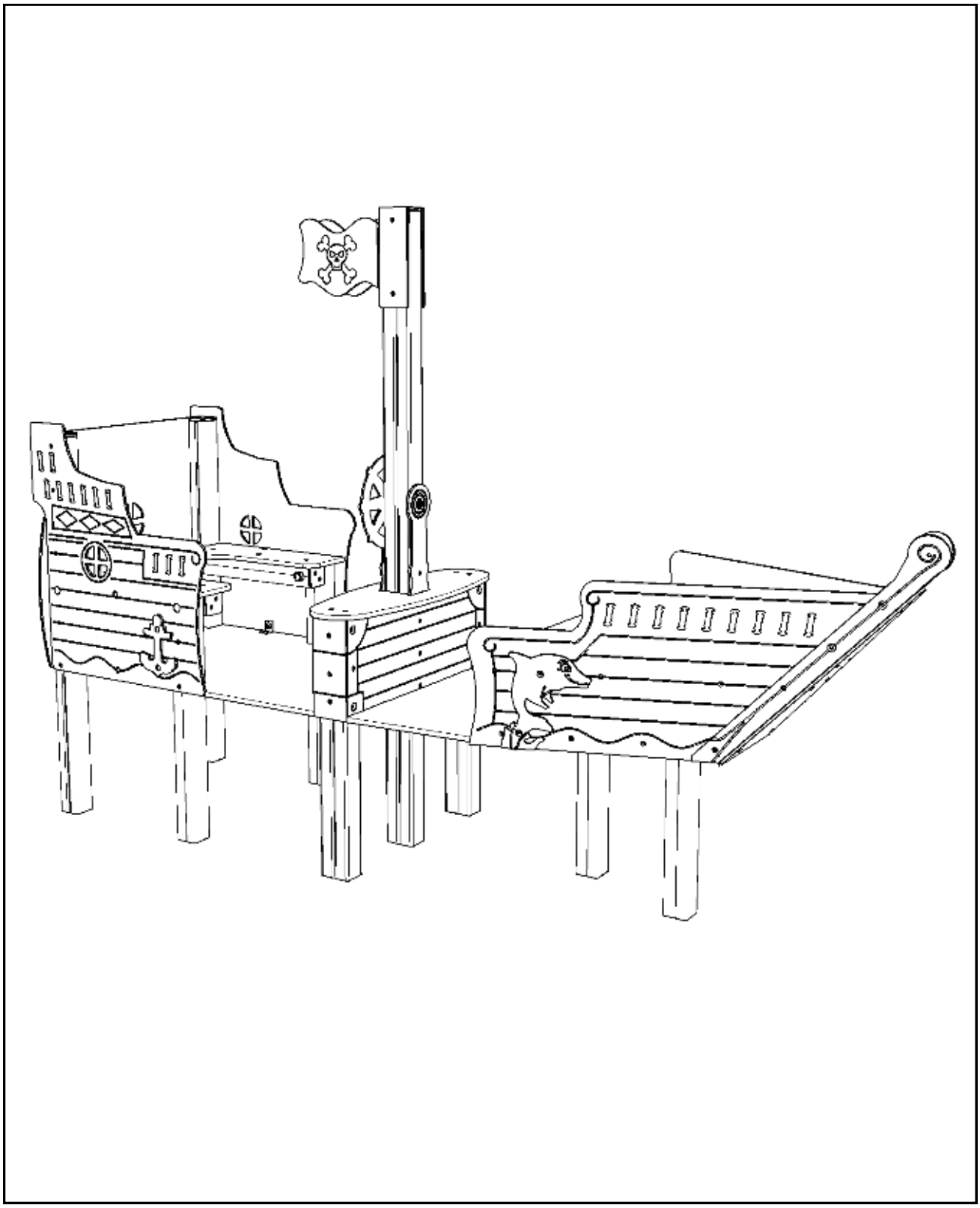

REF: VOY106 - GALLEON

Parts required

TIMBERS

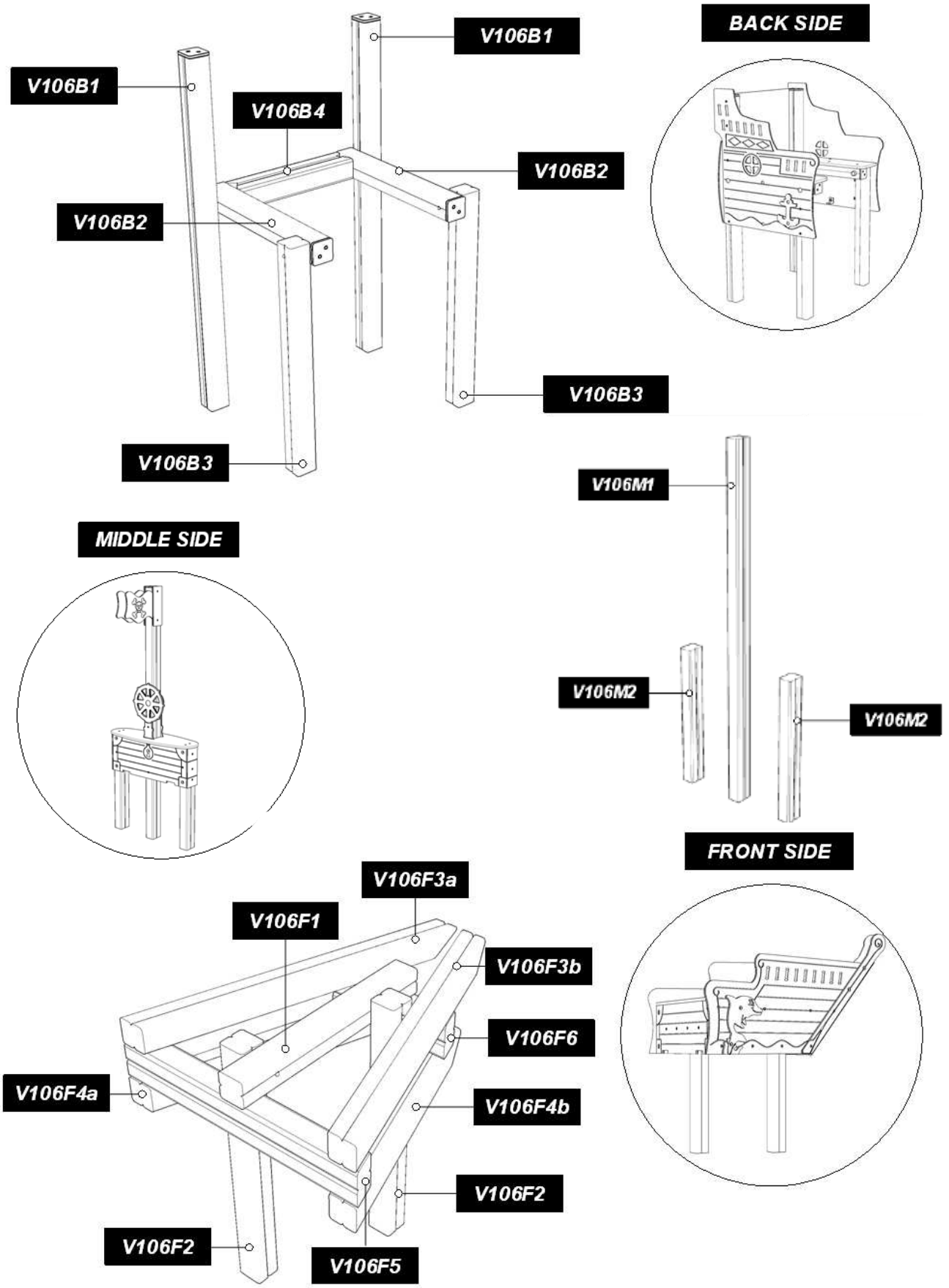

Parts required

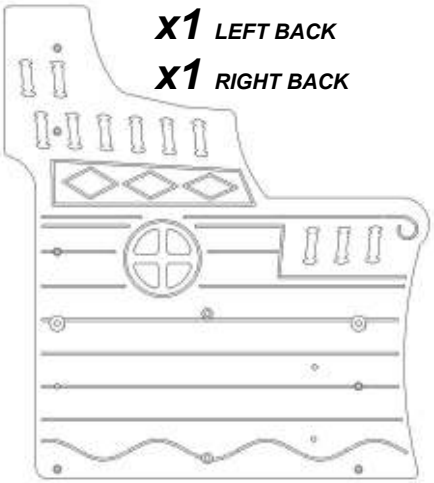

x1 LEFT BACK
x1 RIGHT BACK

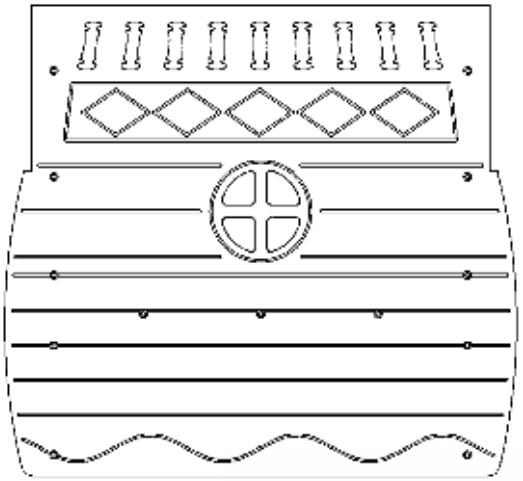

x1 BACK COVER

x2 ANCHOR

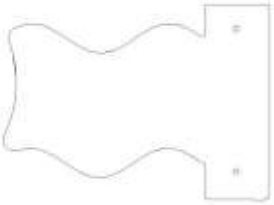

x1 LEFT FLAG
x1 RIGHT FLAG

x1 HELM BACK

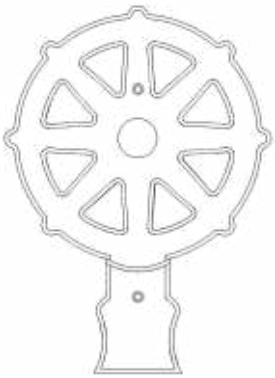

x1 HELM

x1 SPACER

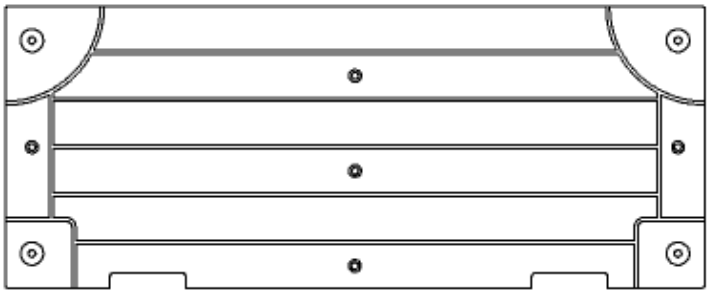

x1 MIDDLE BACK

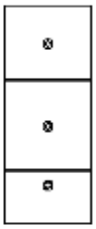

x2 MIDDLE SIDES

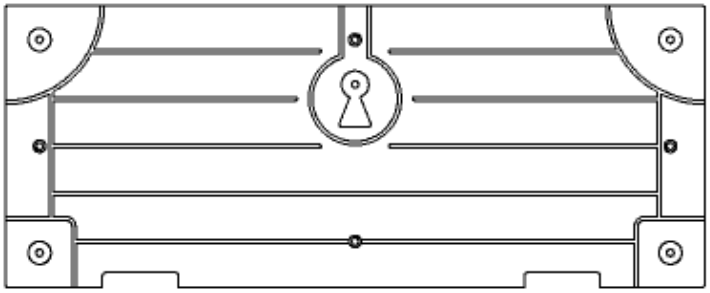

x1 MIDDLE FRONT

Parts required

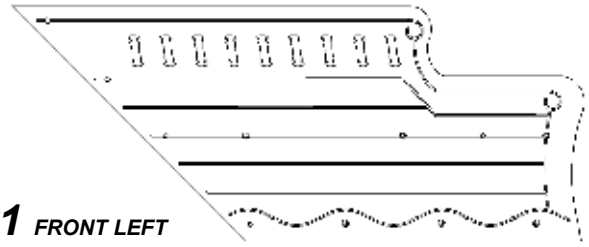

x1 *FRONT LEFT*
x1 *FRONT RIGHT*

x1 *FRONT COVER*

x1 *LEFT DOLPHIN*
x1 *RIGHT DOLPHIN*

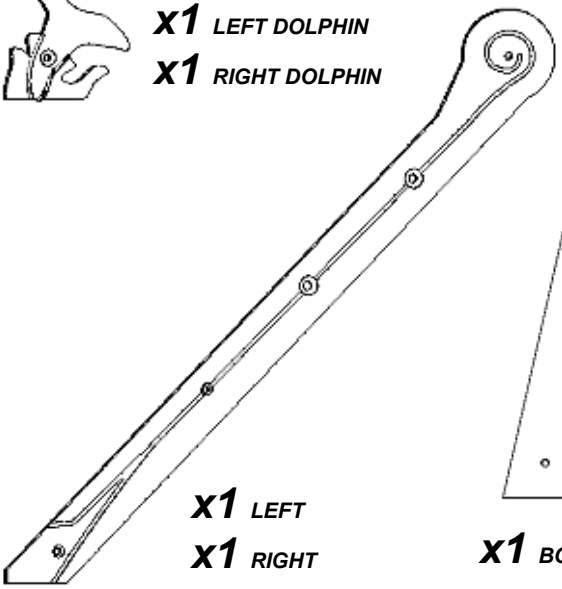

x1 *LEFT*
x1 *RIGHT*

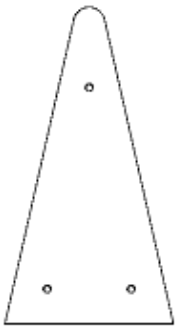

x1 *BOW COVER*

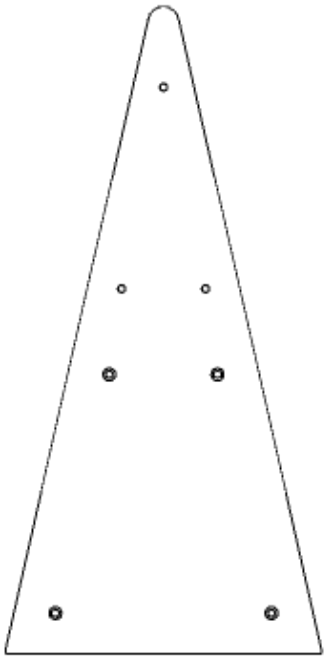

x1 *BOW*

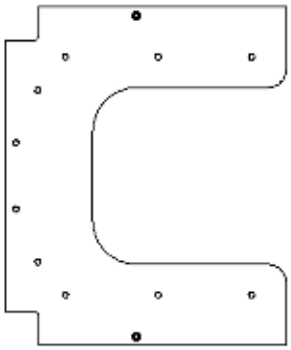

x1 *BACK SEAT*

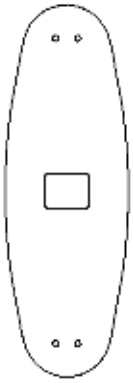

x1 *MIDDLE SEAT*

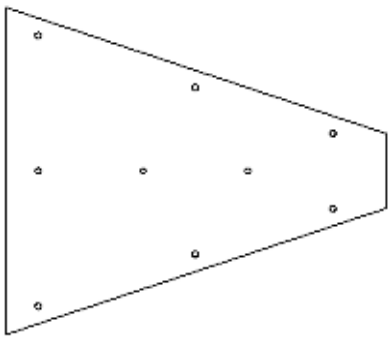

x1 *FRONT SEAT*

Parts required

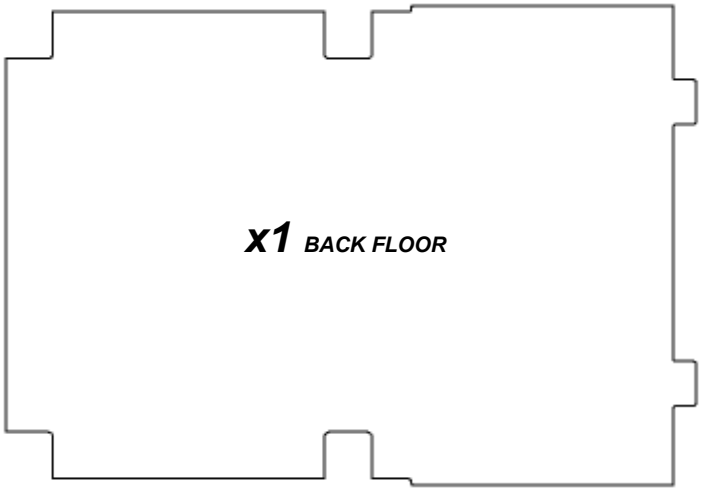

x1 ***BACK FLOOR***

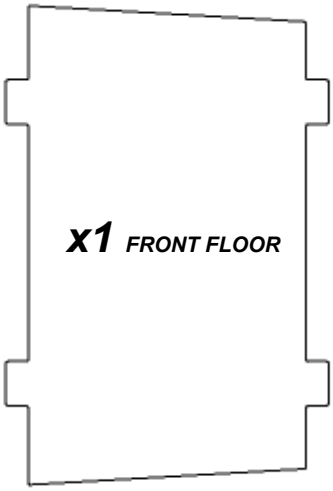

x1 ***FRONT FLOOR***

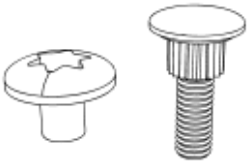

x17 ***(TORK TAINERS)***
4 x 0B/N1
10 x 3B/N1
3 x 4B/N3

x58 ***(FM80 'BRASS SCREW')***
x4 ***(FM180 'BRASS SCREW')***

x2 ***(M12 NYLOC)***

x2 ***(M12 x 200 square cup hex bolt)***

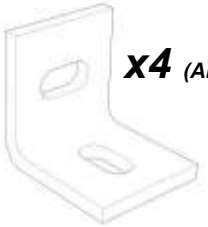

x4 ***(ANGLE CLEAT)***

TOOLS required

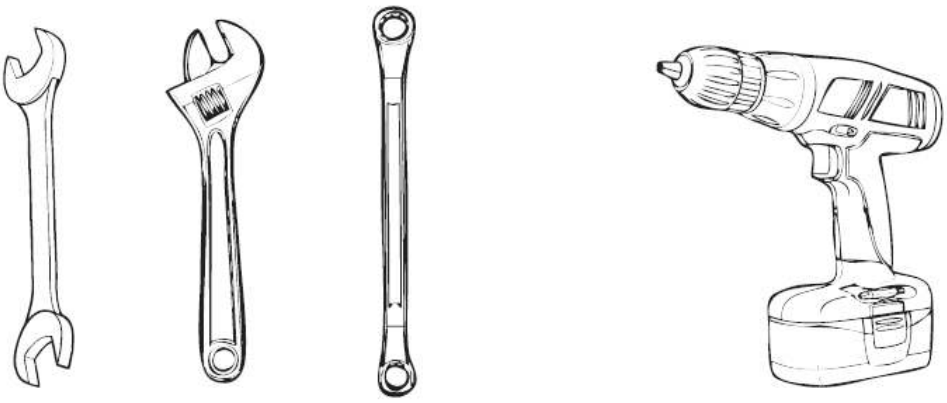

Foundation details

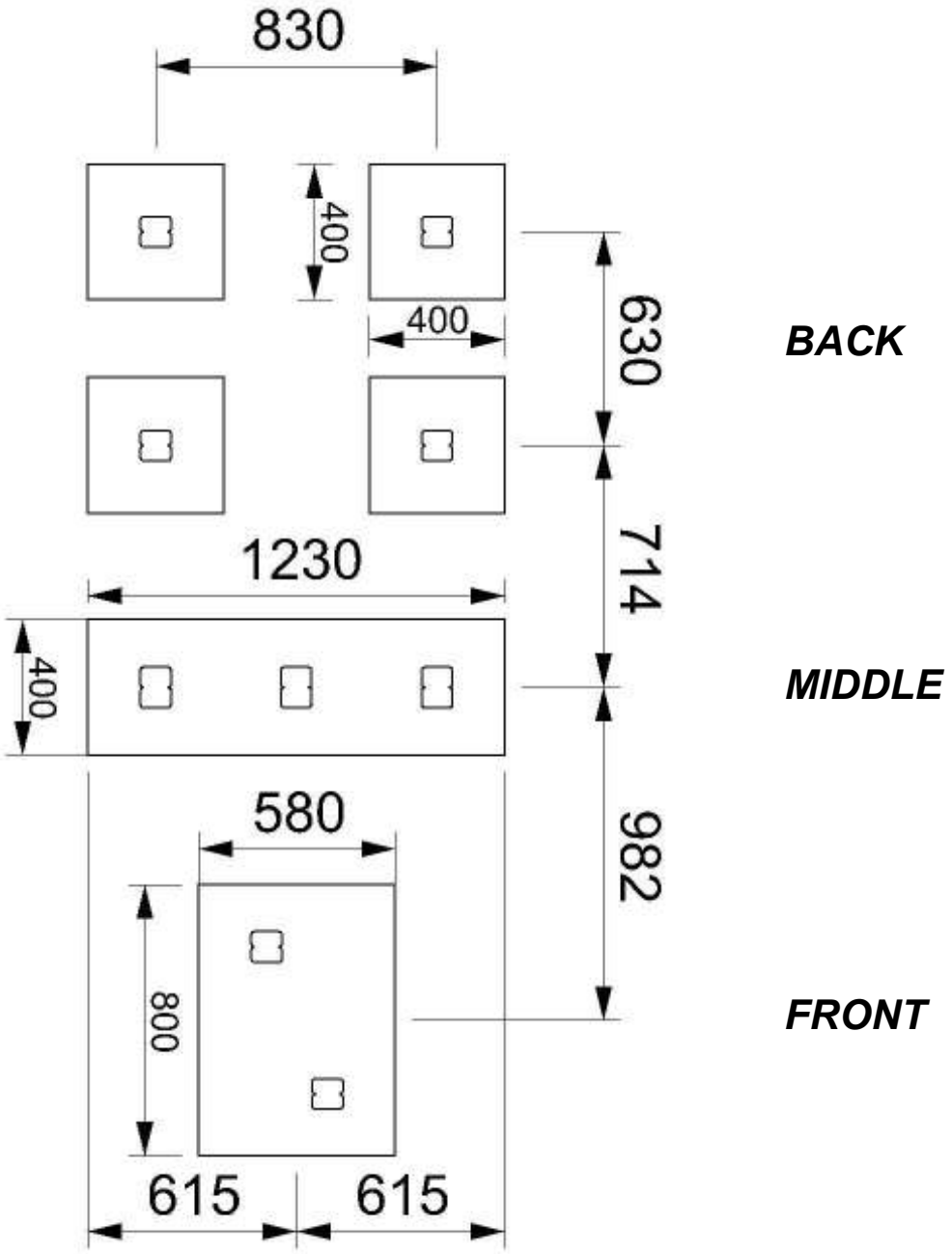

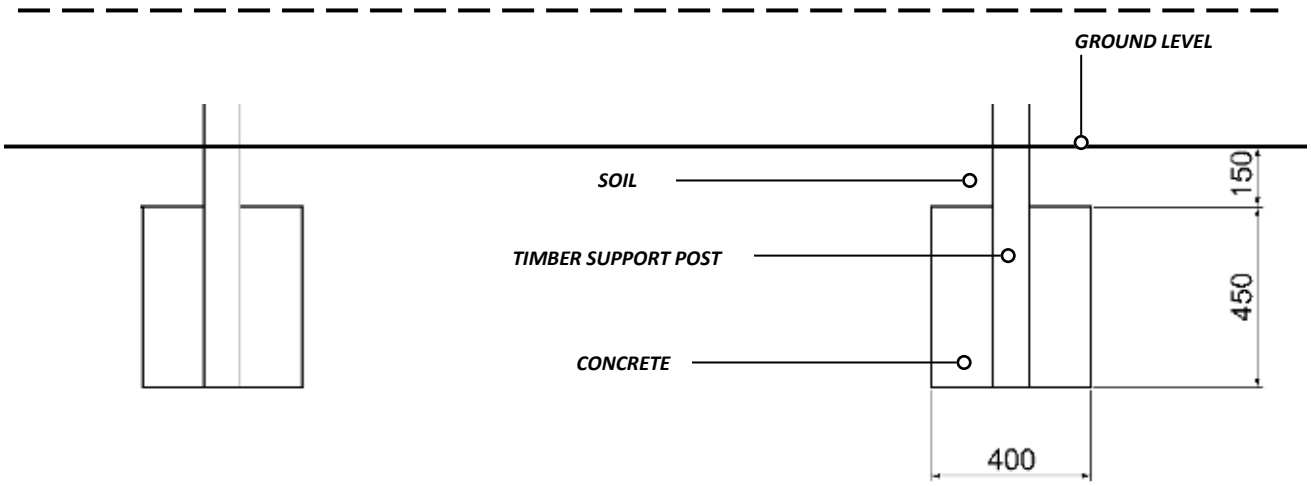

Surfacing details

= MINIMUM SPACE
= SURFACING AREA

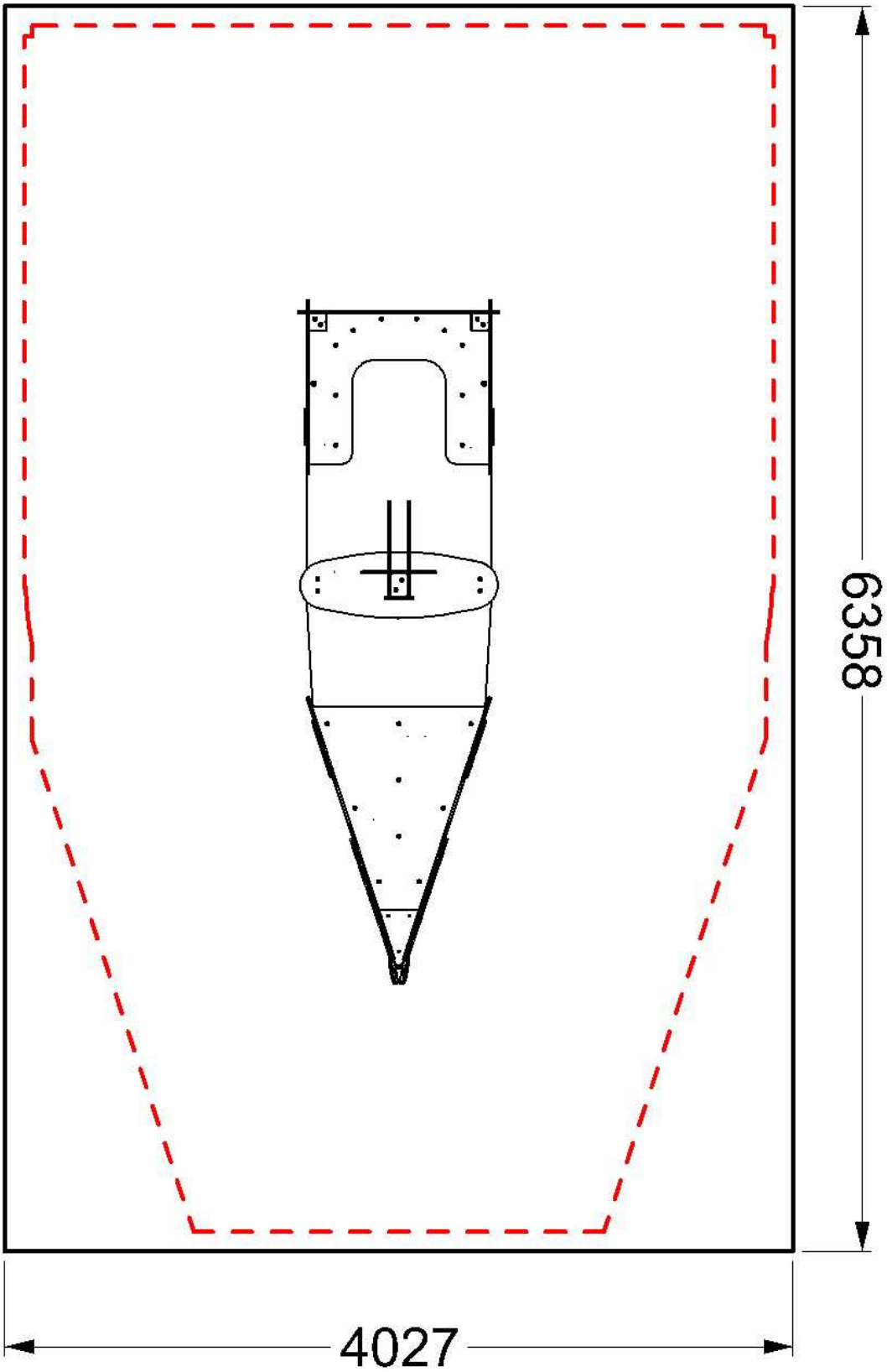

Assembly instructions

1 Attach the anchors and Angle cleats to the LEFT/RIGHT BACK

Using 3B - N1 TORKTAINERS (ANCHORS) 0B - N1 TORKTAINERS (ANGLE CLEATS)

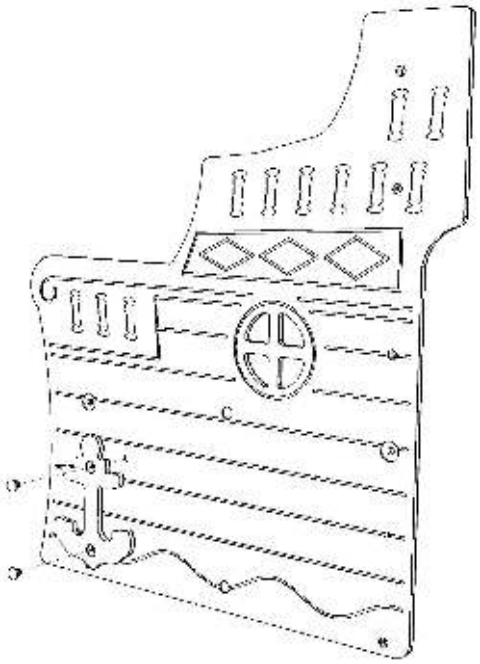

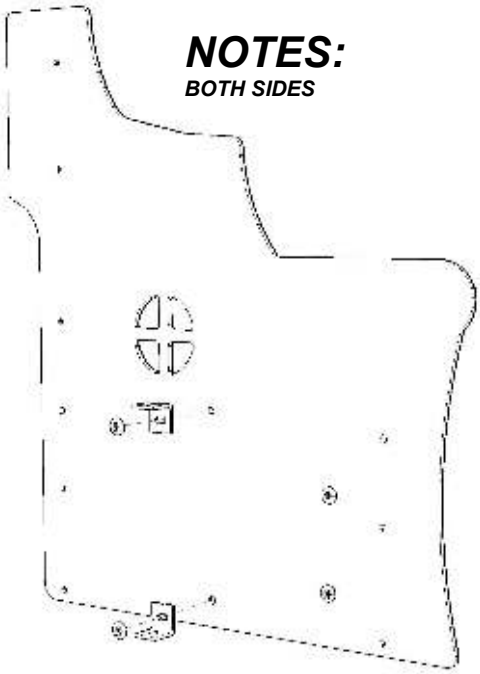

NOTES:
BOTH SIDES

2 Attach the LEFT/RIGHT BACKS to the TIMBERS (V106B1/ V106B2/V106B3)

Using M12 CUP SQUARE BOLTS / NYLOCS / END CAPS AND 'BRASS SCREWS'

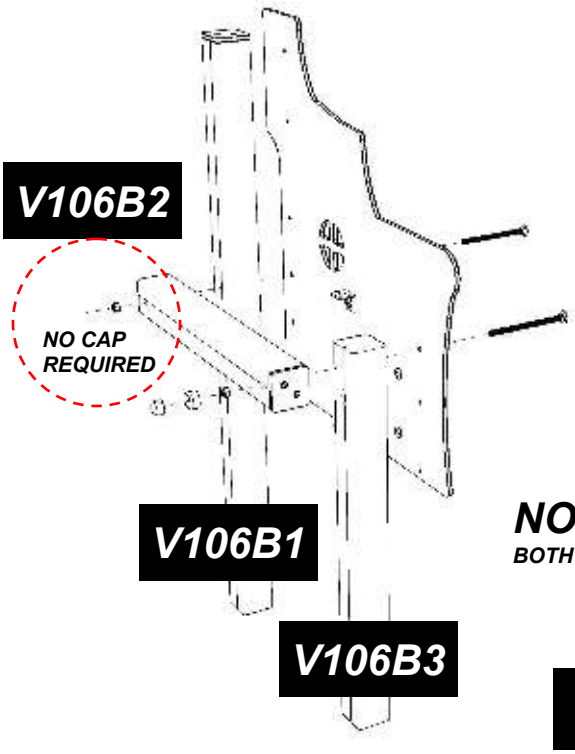

NOTES:
BOTH SIDES

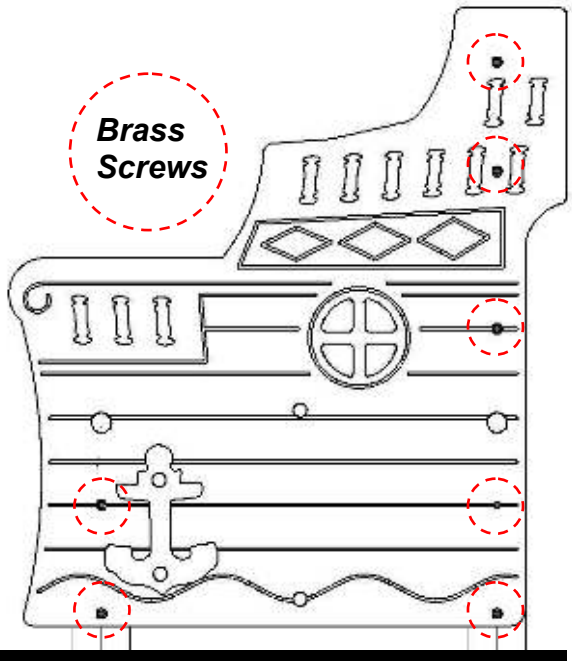

PRE-ASSEMBLED PIECE

Assembly instructions

3 Attach the COVER BACK to the TIMBER (V106B4)

Using 'BRASS SCREWS'

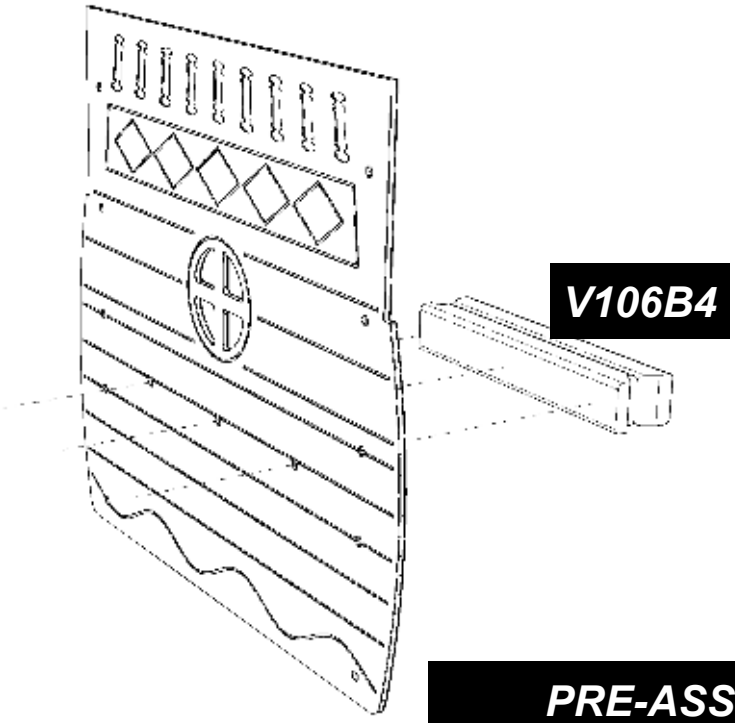

PRE-ASSEMBLED PIECE

4 Place the BACK FLOOR and install LEFT/RIGHT BACKS

Using 'BRASS SCREWS'

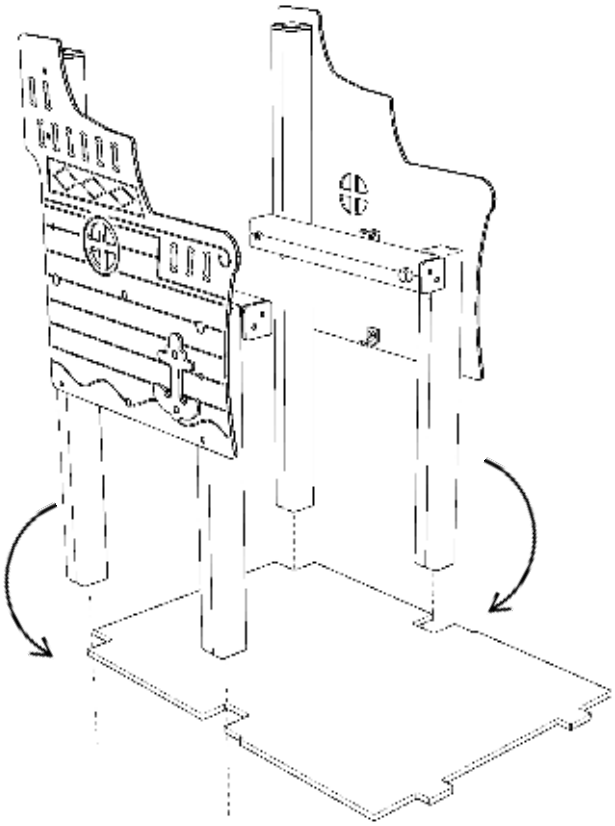

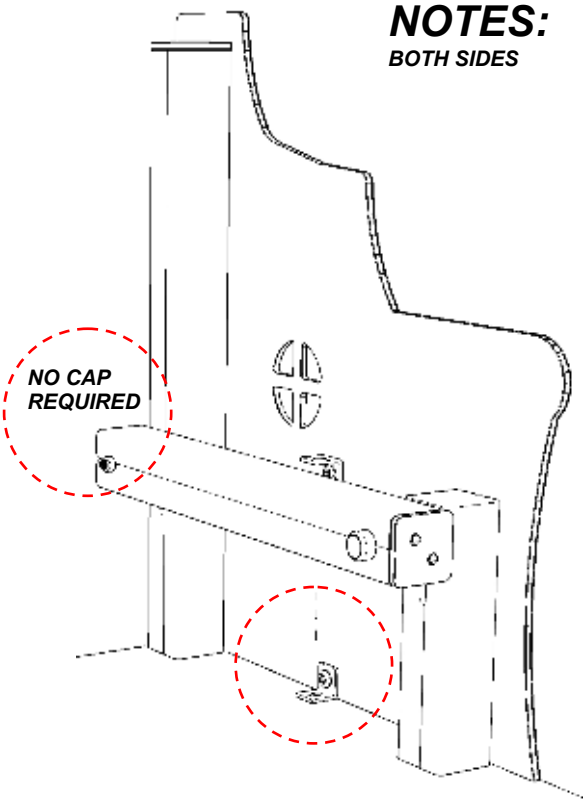

NOTES:
BOTH SIDES

5 install BACK COVER

Using 'BRASS SCREWS'

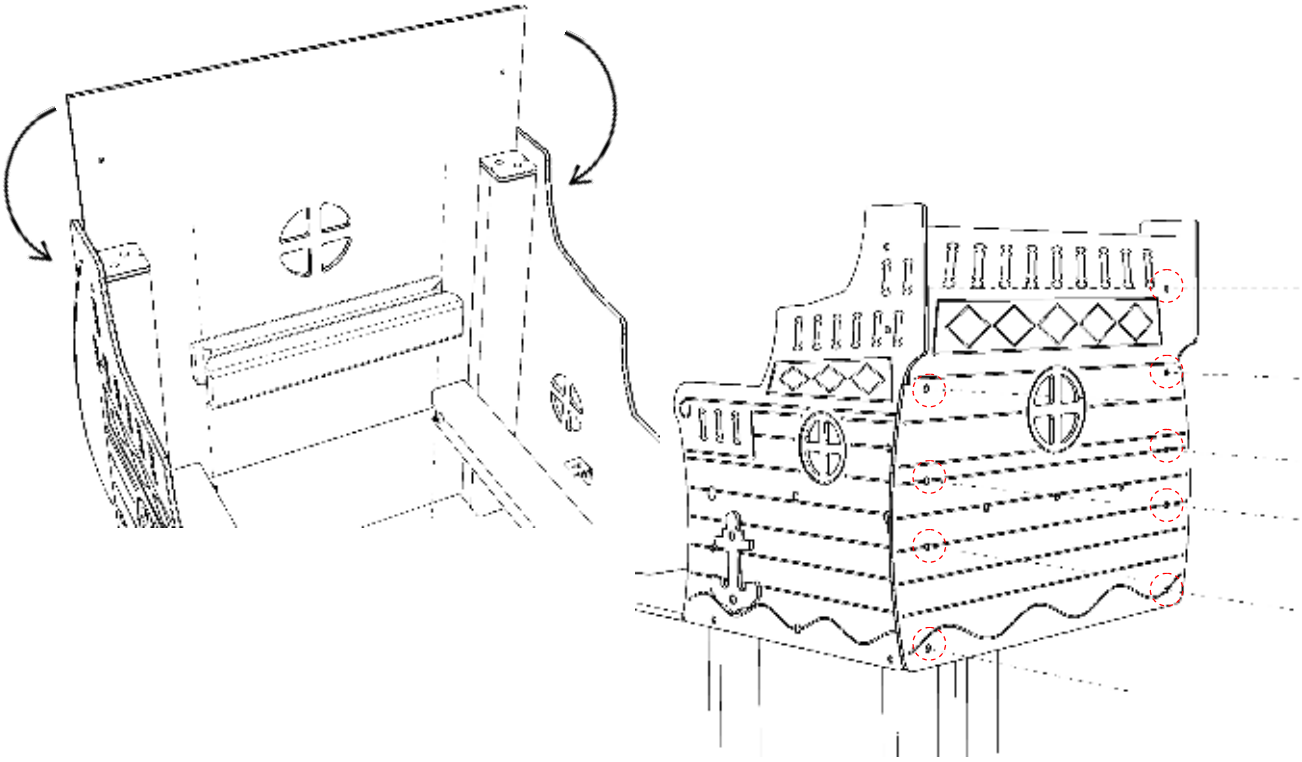

6 Attach the BACK SEAT to the TIMBERS (V106B2/V106B4)

Using 'BRASS SCREWS' and TORKTAINERS

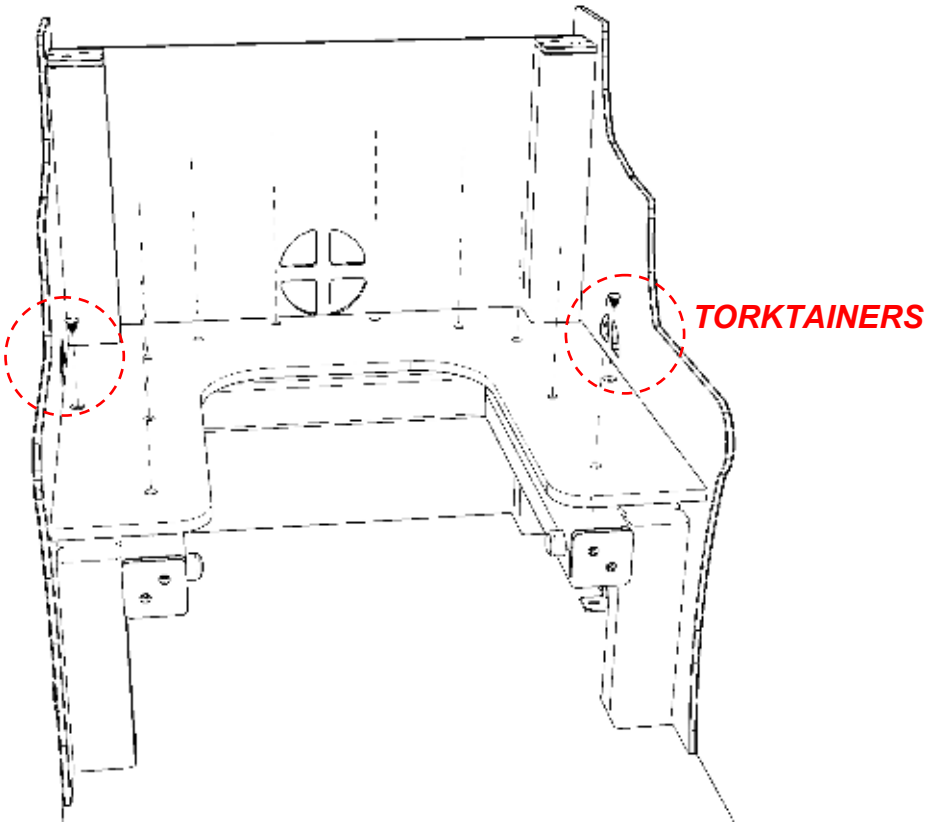

7 Attach the FLAG to the TIMBER (V106M1)

Using 'BRASS SCREWS'

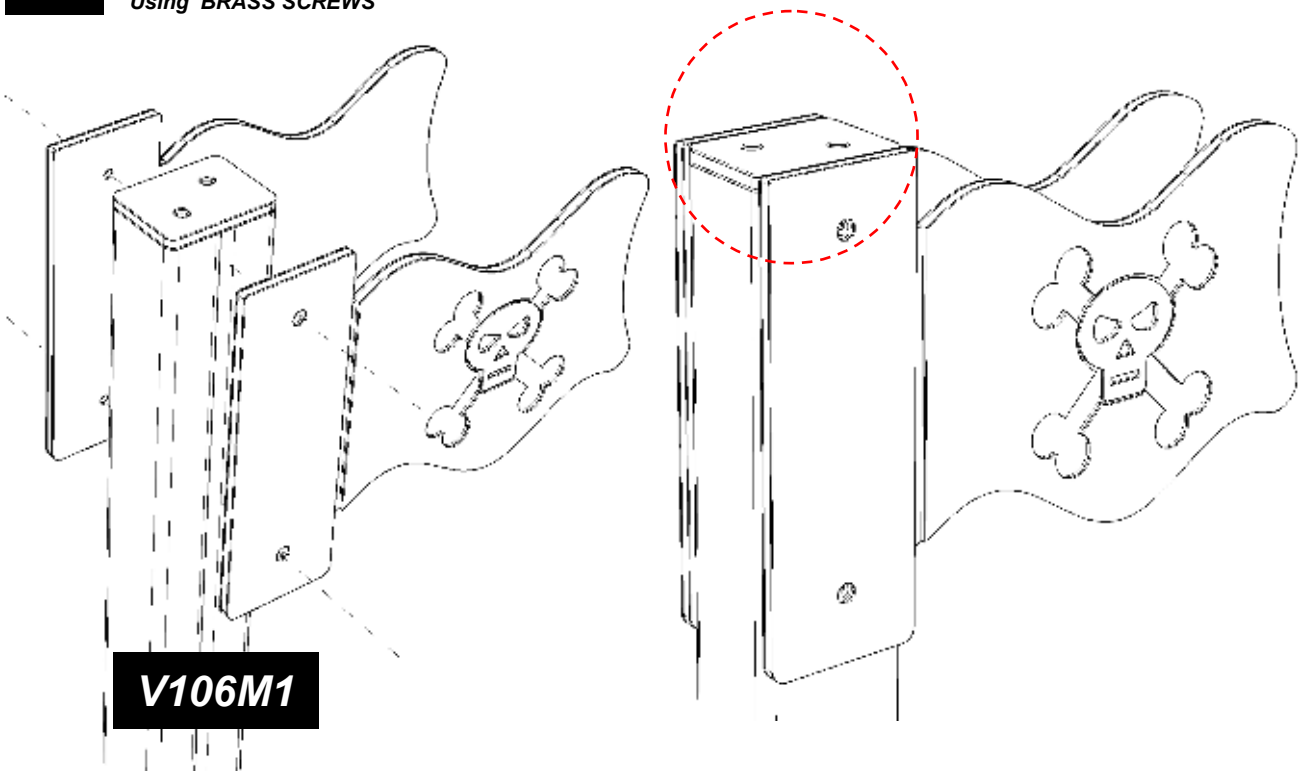

8 INSTALL TIMBERS (V106M1/V106M2)

ENSURE:
LEAVE 12mm GAP BETWEEN TIMBERS AND FLOOR

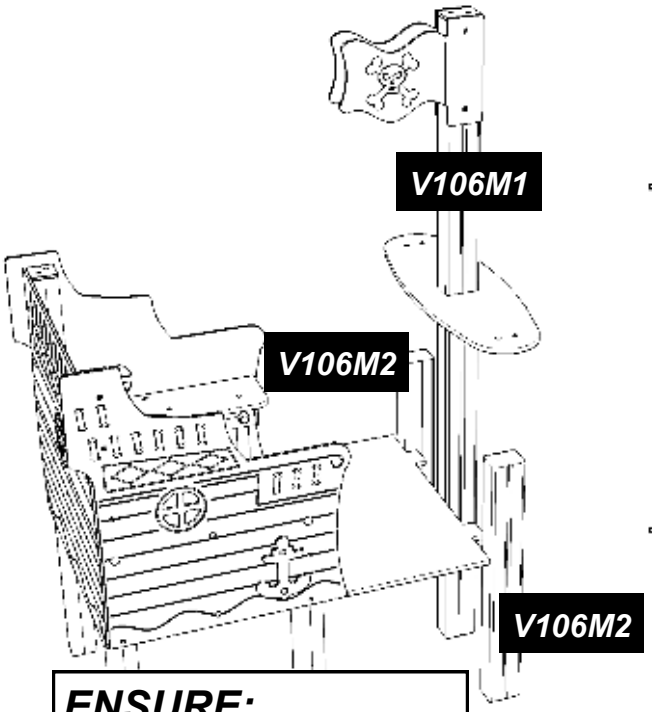

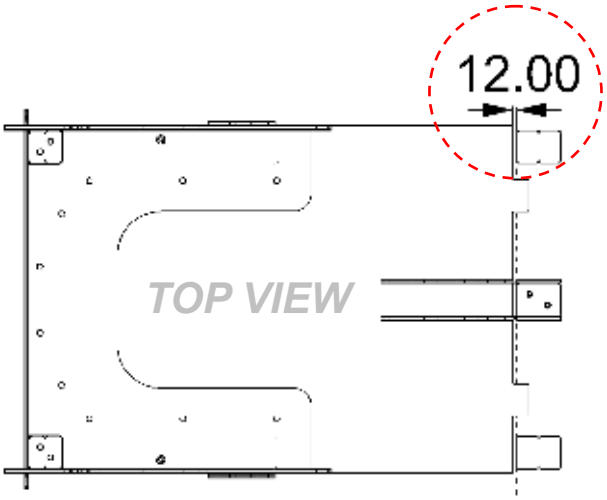

ENSURE:
TO SLIDE MIDDLE SEAT OVER V106M1 TIMBER

9 Attach the MIDDLE BACK and FRONT to the TIMBERS (V106M1/V106M2)

Using 'BRASS SCREWS'

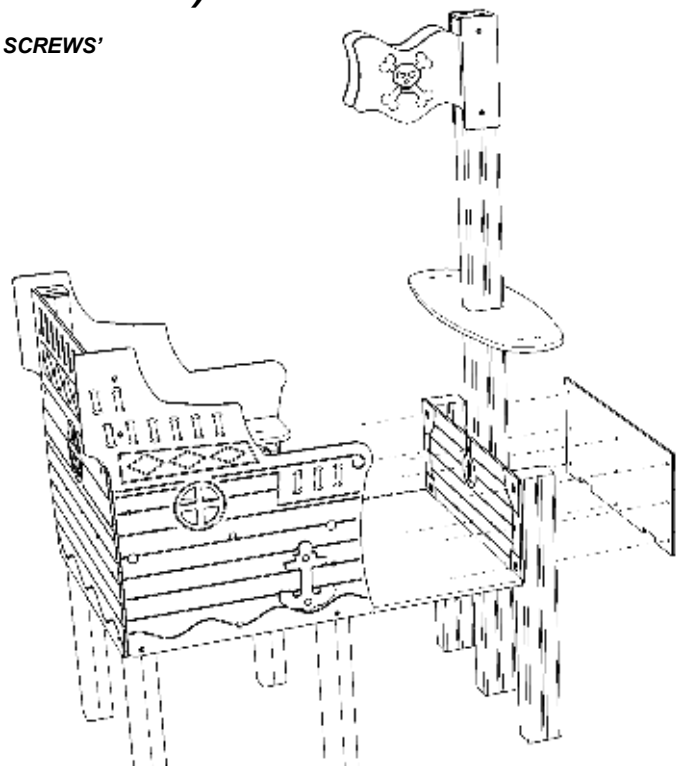

10 Attach the MIDDLE SIDES,SEAT (clamp the seat with HELM) to the TIMBERS (V106M1/V106M2)

Using 'BRASS SCREWS'

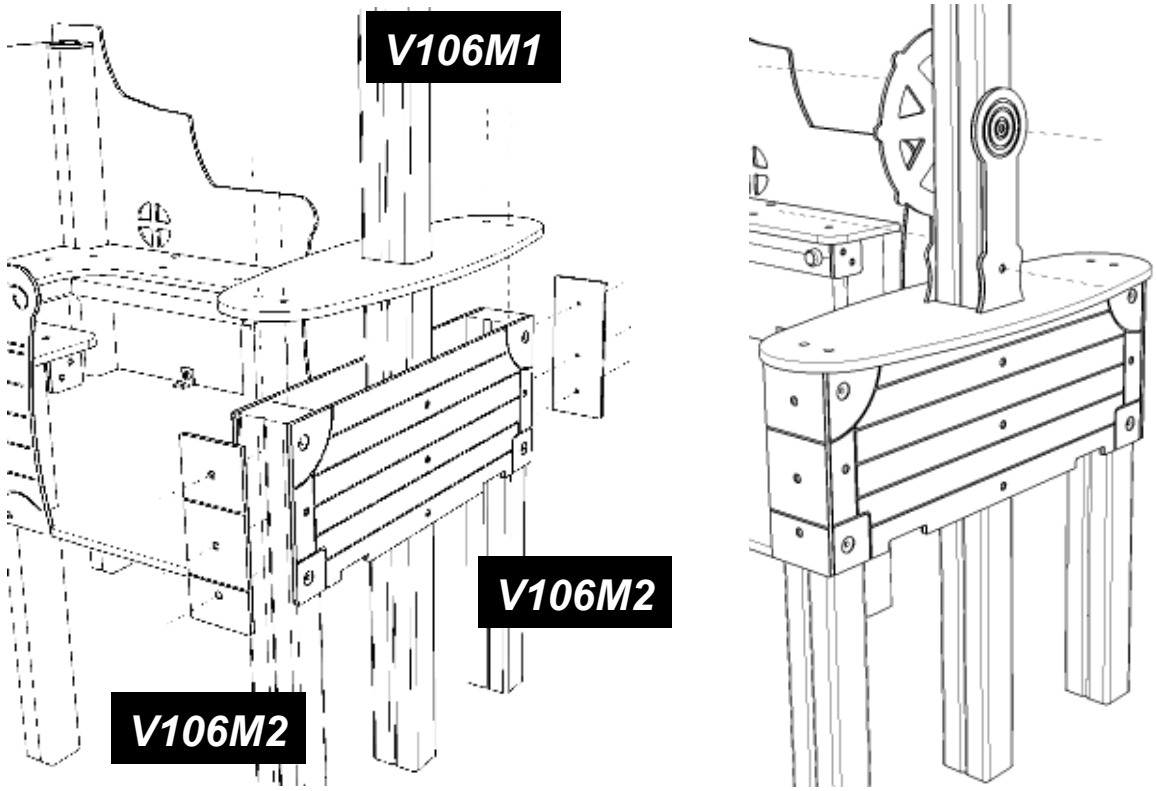

11 Place the FRONT FLOOR

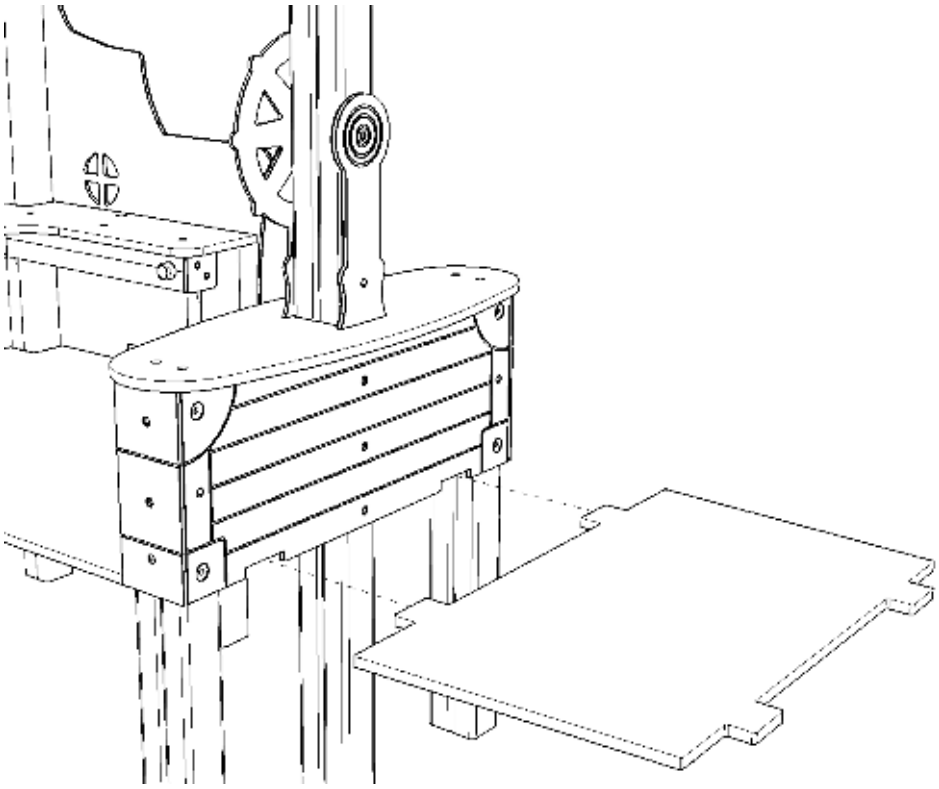

12 Attach the FRONT LEFT/RIGHT

Using 'BRASS SCREWS'

NOTES:
Use V106F5 TO POSITION

DO NOT ATTACH V106F5

'A' TIMBERS ATTACHED TO THE LEFT
'B' TIMBERS ATTACHED TO THE RIGHT

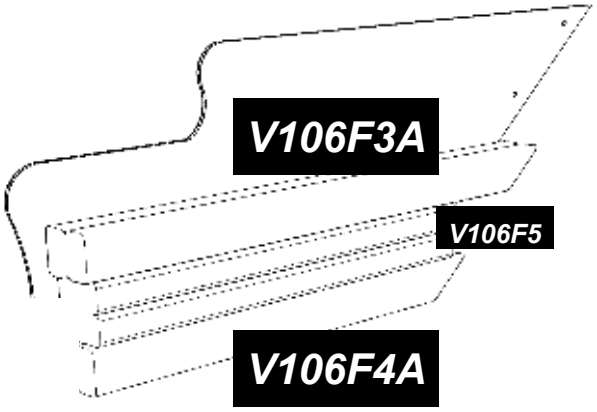

NOTES:
BOTH SIDES

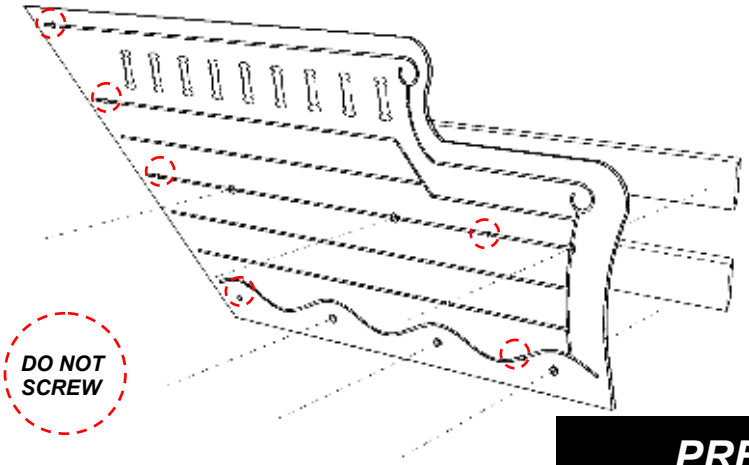

PRE-ASSEMBLED PIECE

13 Attach the DOLPHIN and LEFT/RIGHT pieces

Using 'BRASS SCREWS' and TORKTAINERS

NOTES:
BOTH SIDES

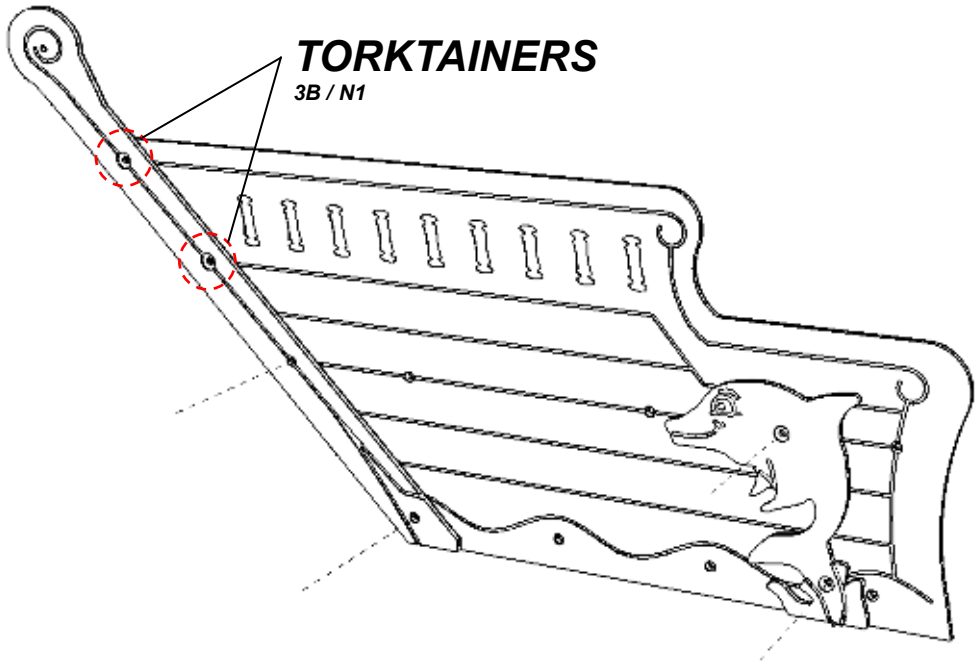

14 Attach the V106F5 TIMBER to the FRONT COVER

Using 'BRASS SCREWS'

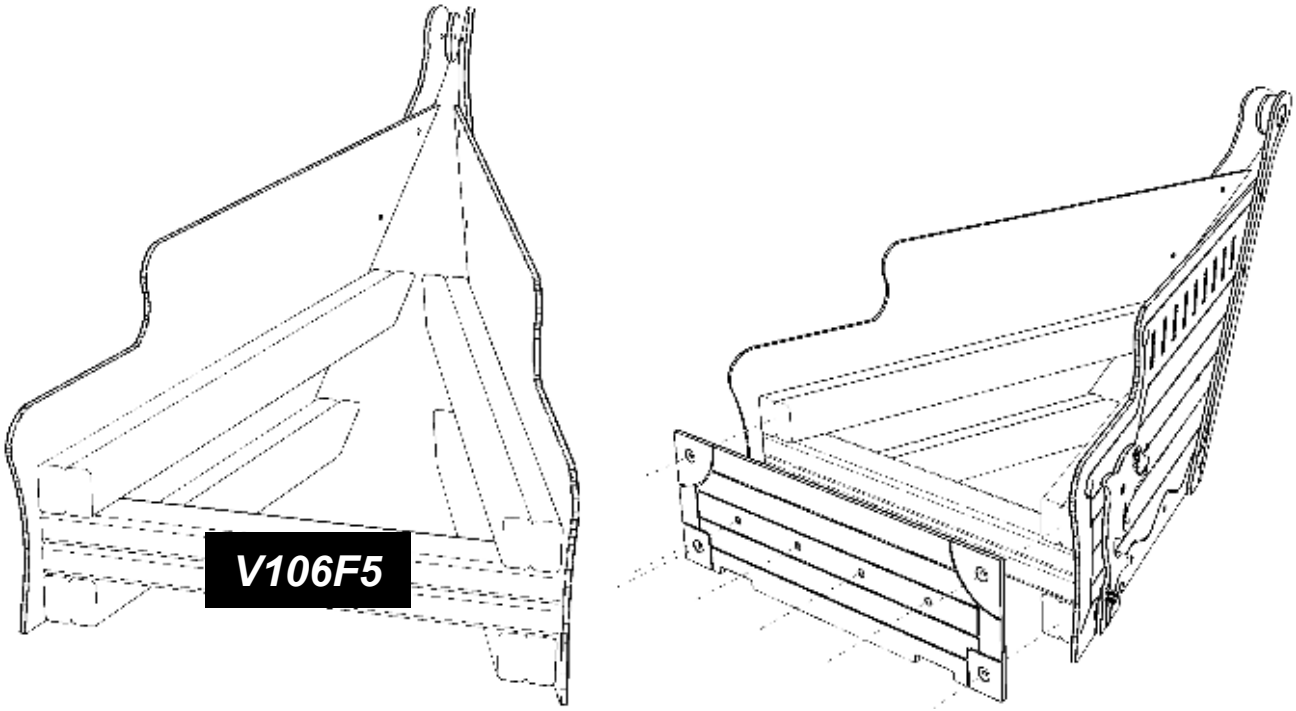

15 Attach the BOW to the TIMBERS V106F3a/b,V106F4a/b

Using 'BRASS SCREWS'

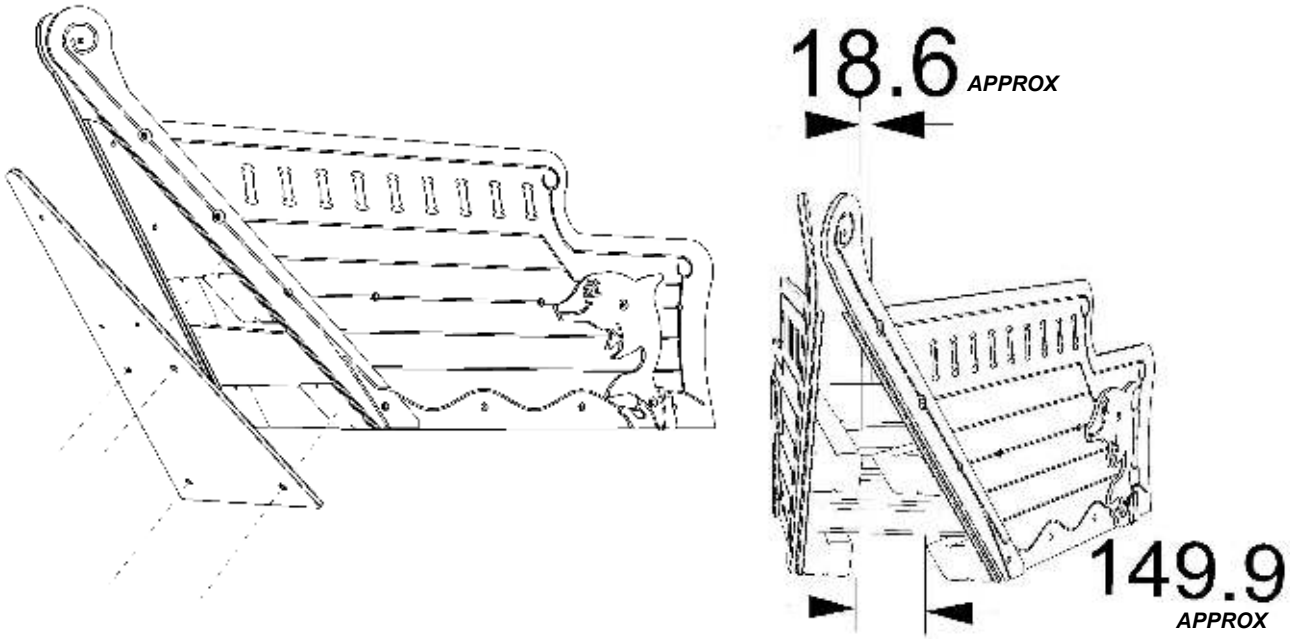

16 Attach the V106F6 TIMBER to the TIMBERS V106F3a/b,V106F4a/b

Using 'BRASS SCREWS'

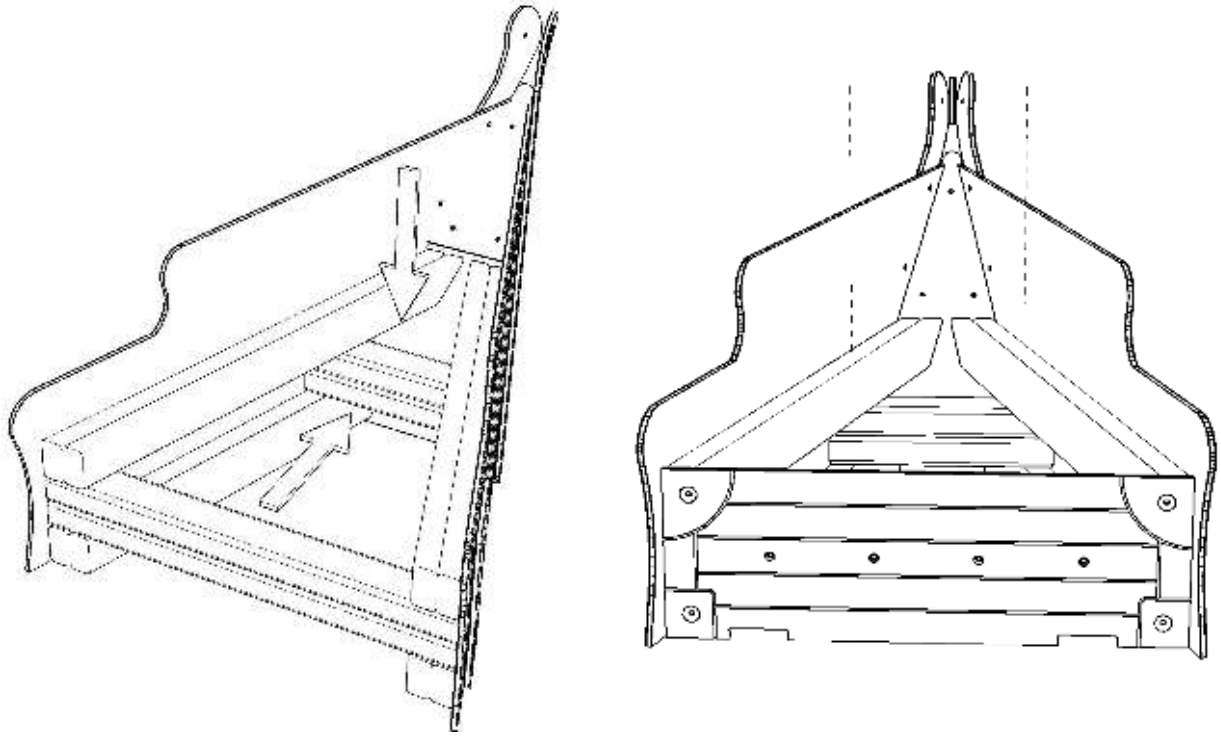

17 Attach the FRONT PIECE TO THE FLOOR

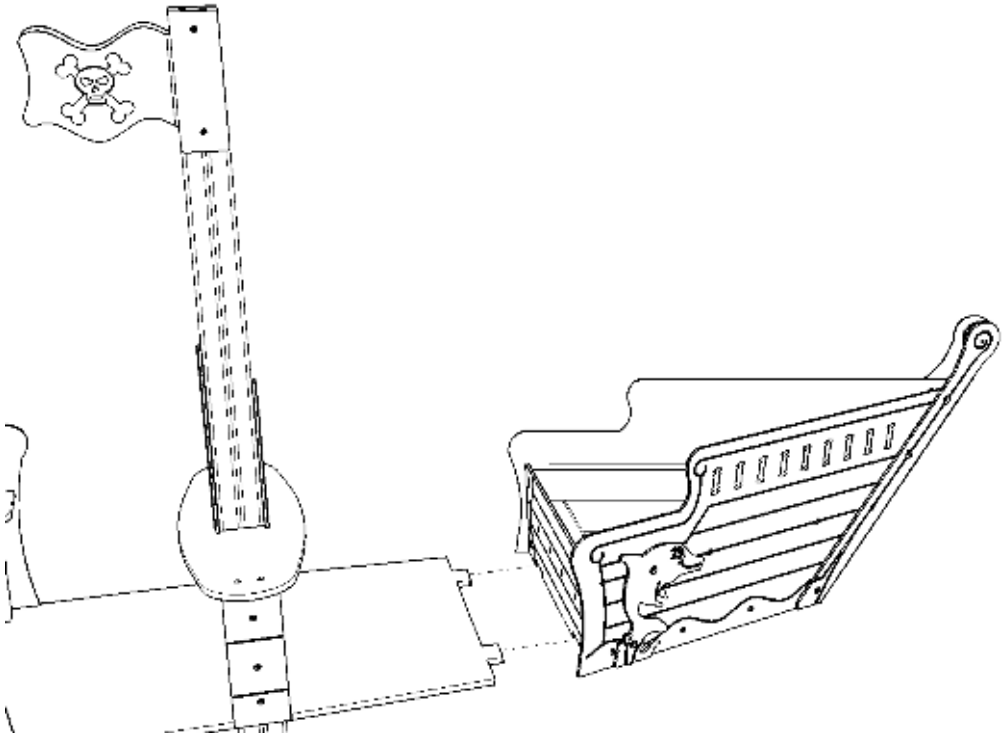

18 Attach the V106F2 TIMBERS to the TIMBER V106F1

Using M12 CUP SQUARE BOLTS / NYLOCS

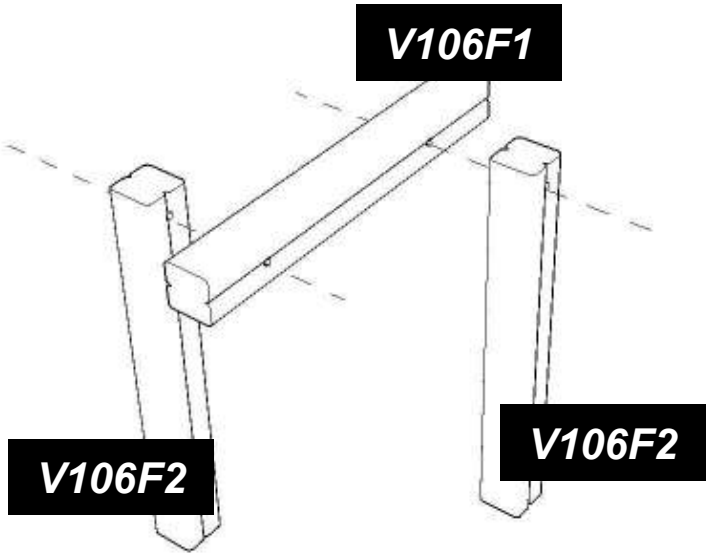

19 Attach FRONT SUPPORT ASSEMBLY

Using 'BRASS SCREWS'

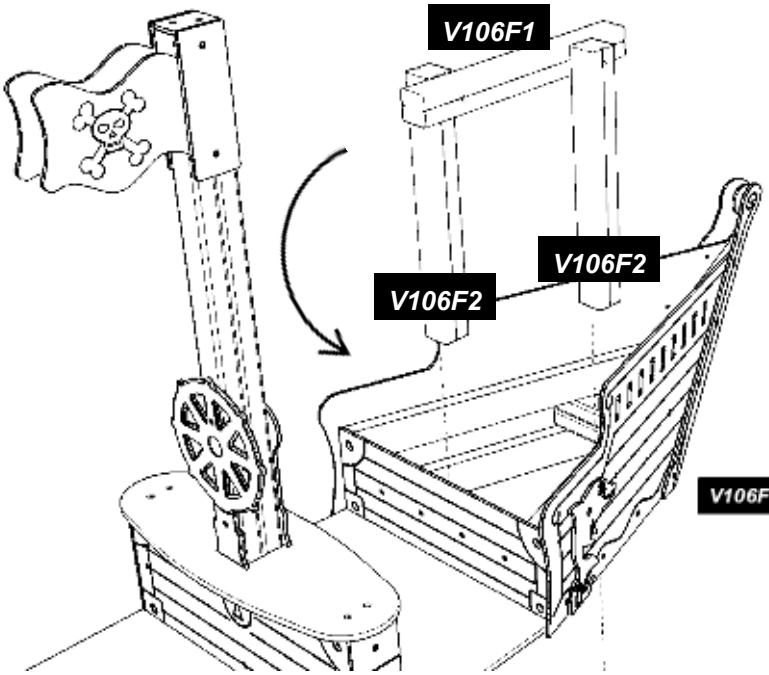

ENSURE:
ASSEMBLY IS IN THE MIDDLE OF THE V106F5 V106F6 TIMBERS

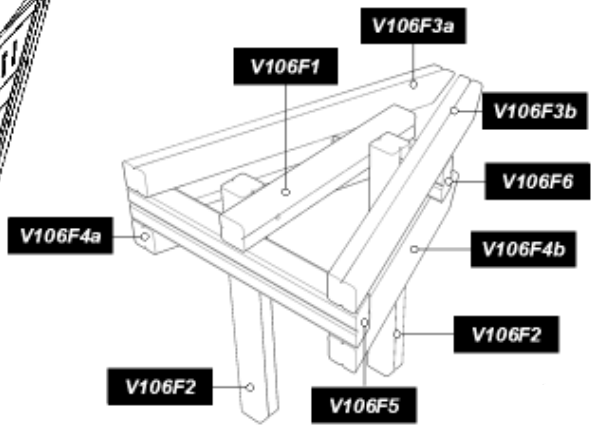

20 Attach the FRONT SEAT to the TIMBER V106F3a/b, V106F4a/b,V106F1

Using 'BRASS SCREWS'

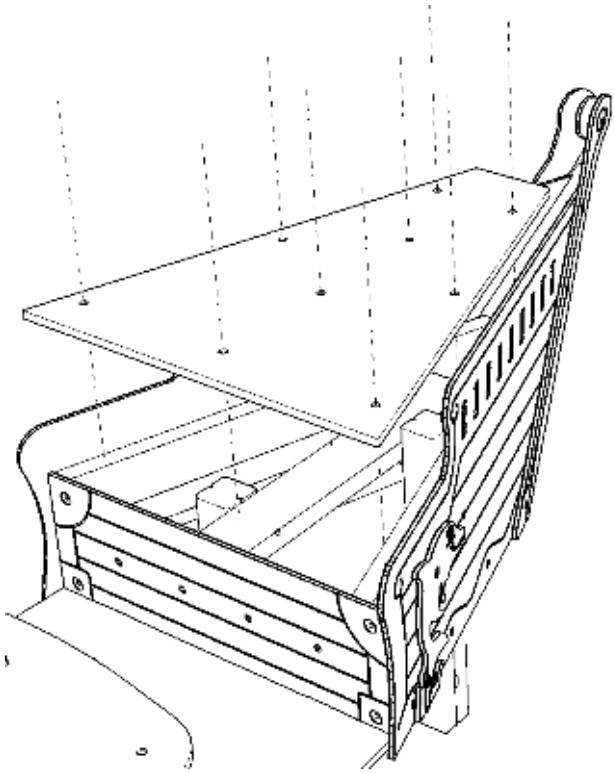

21 ATTACH THE FRONT BOW and PLAYTEC SPACER

Using TORKTAINERS

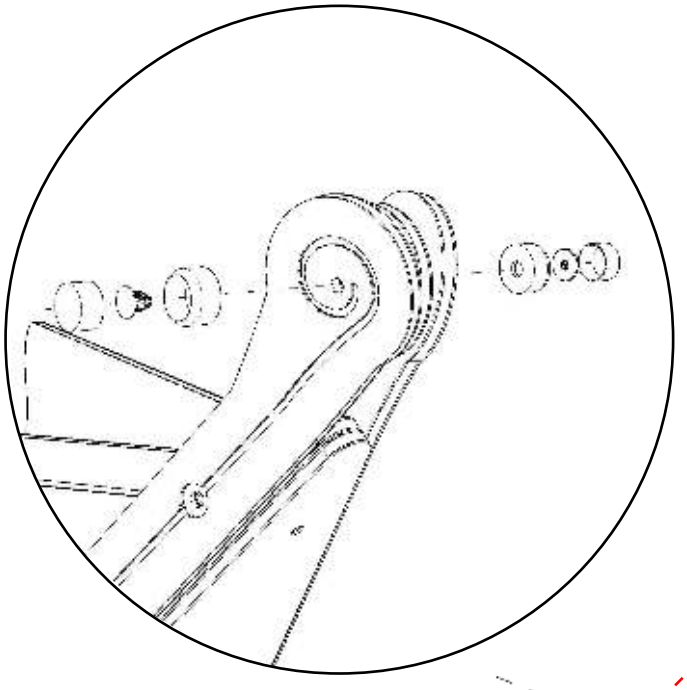

NOTES:
THE 2x SIDES WILL FLEX INTO POSIION

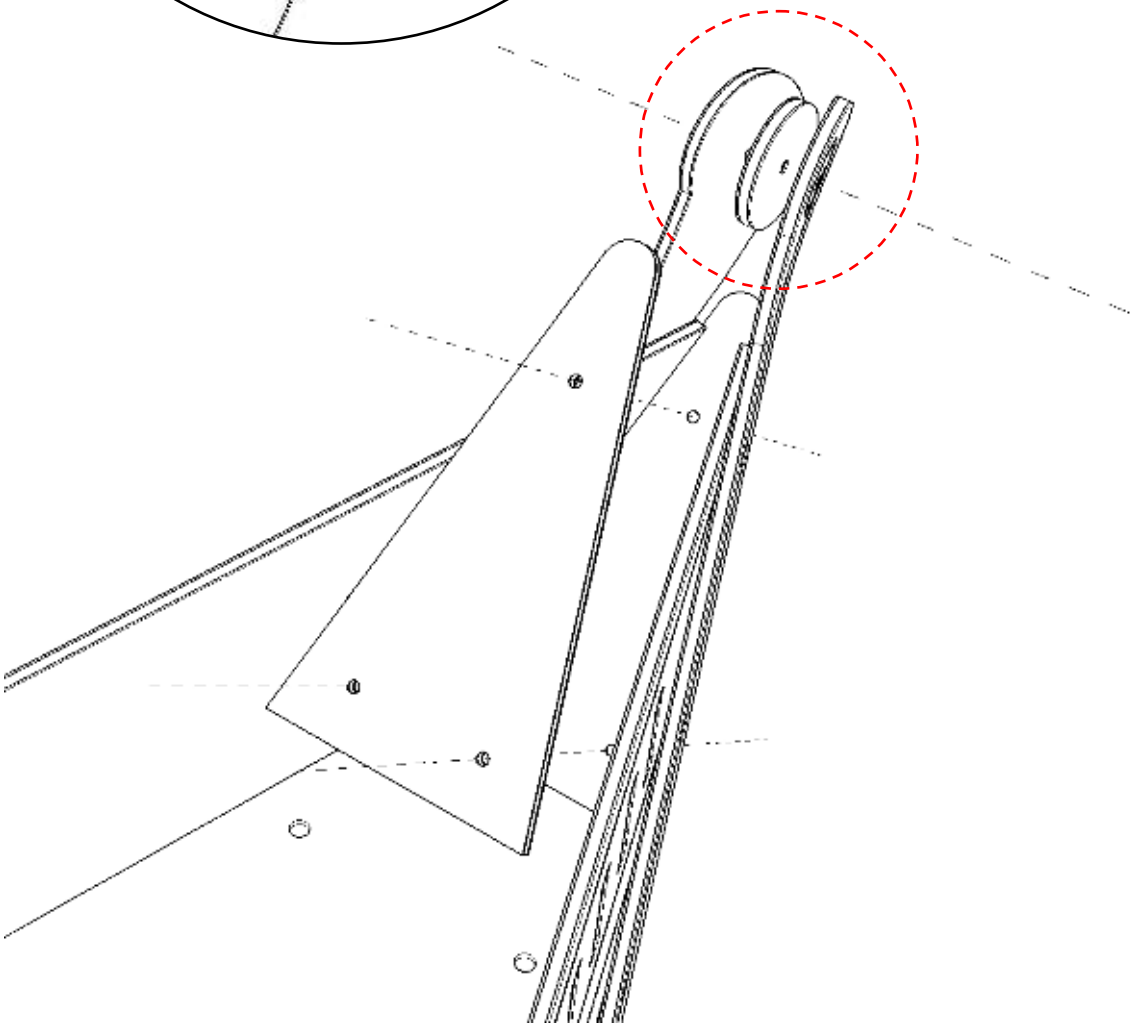
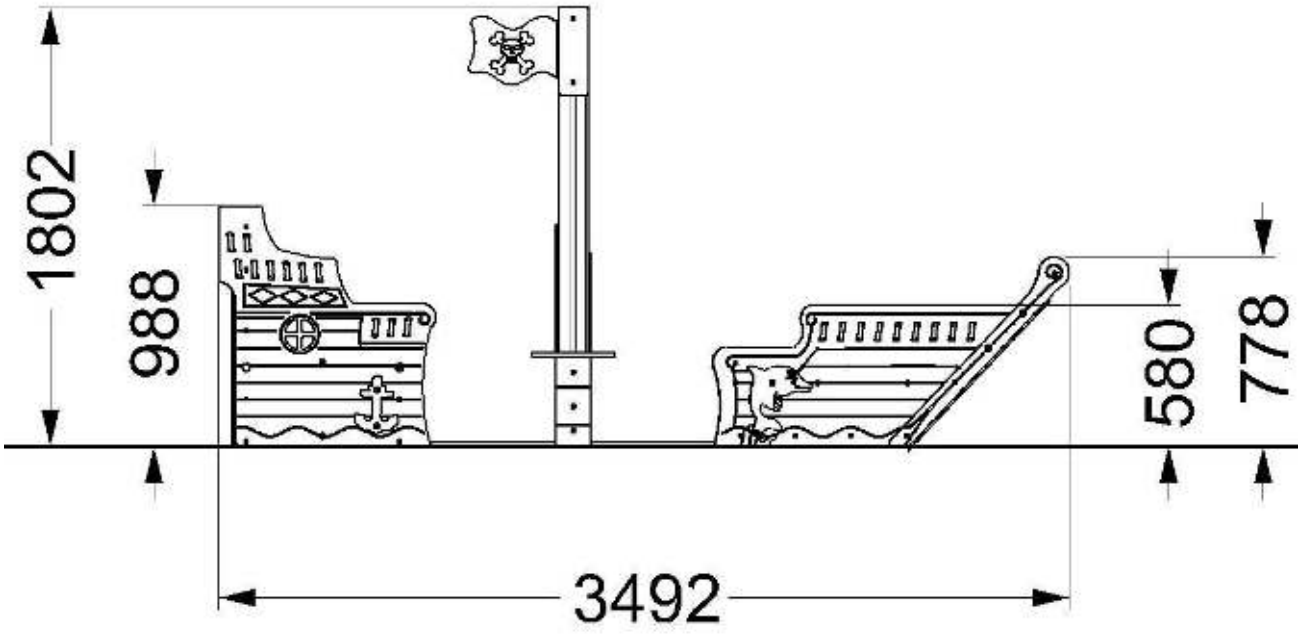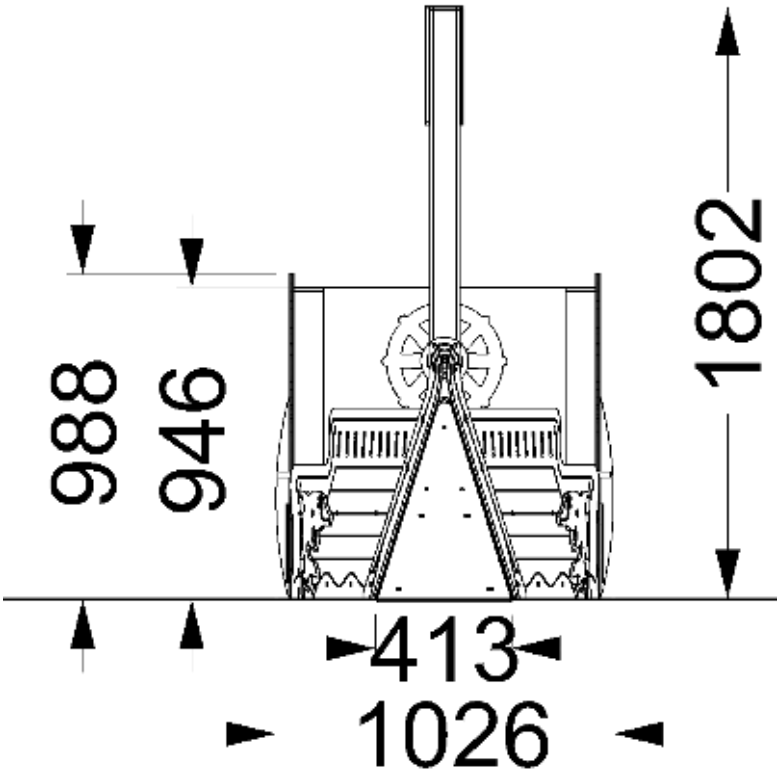
Additional dimensions