# SEESAW

**FFH:** 1.2m
**MIN. AREA:** 6.02 x 3.48m

Tanilith E pressure treated European Pine, sanded to produce a high quality finish. The raw material is sourced from well managed sustainable forests.

Fastenings are tamper-proof or capped with secure custom-made plastic tamper proof covers. All footholds have a slip-resistant surface.

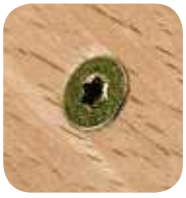
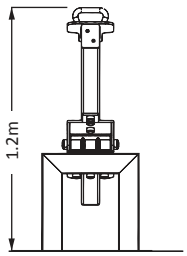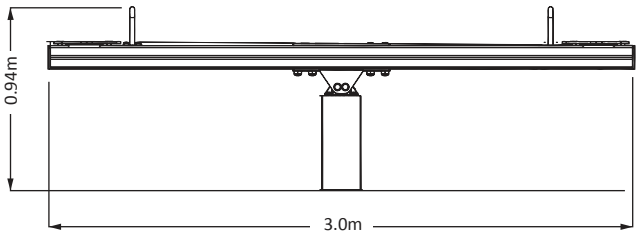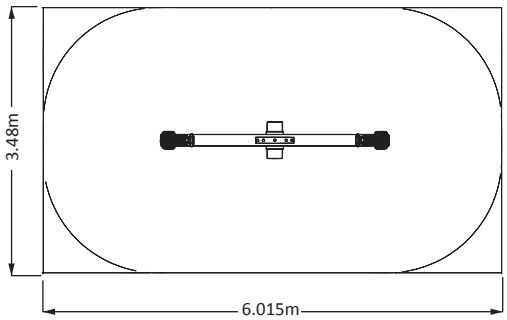
High quality countersunk torx head wood screw with special thread. Hardened steel with a brass effect finish.