NUR126 - TRAVERSE PANEL

creative play

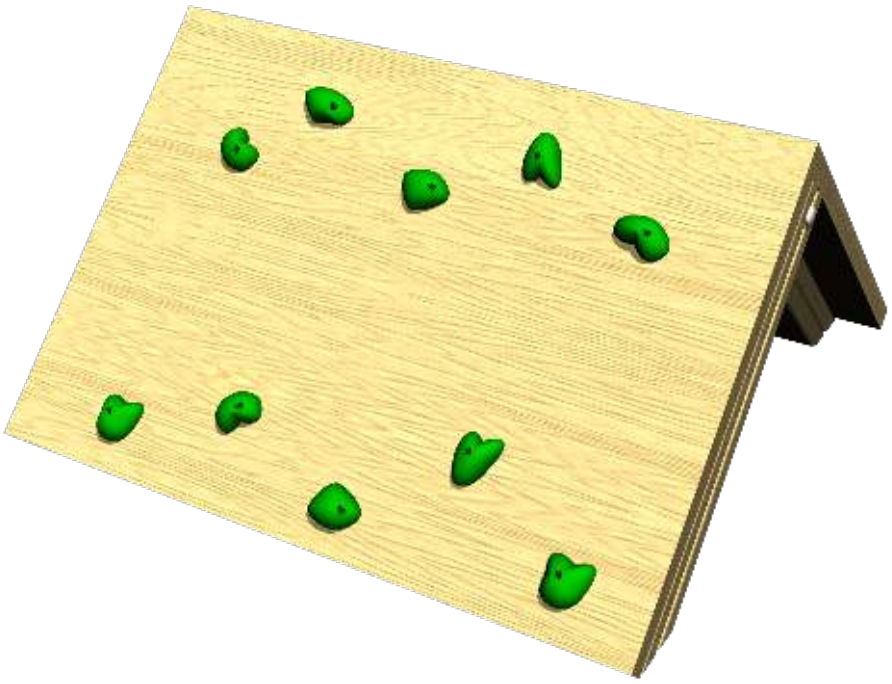

AGE RANGE 2 - 5 YEARS | MULTIPLE CHILDREN | 15.6M² SURFACE AREA

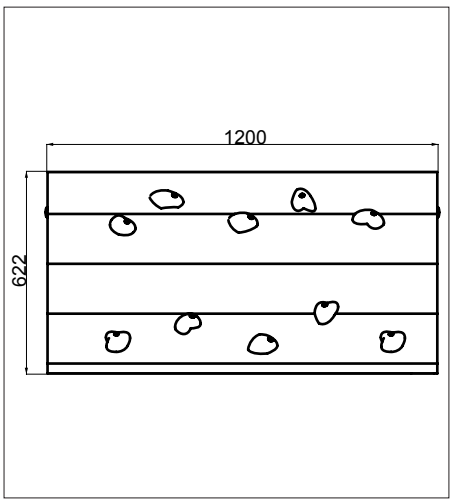

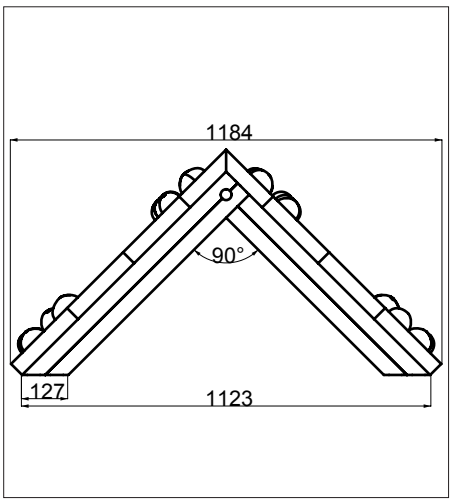

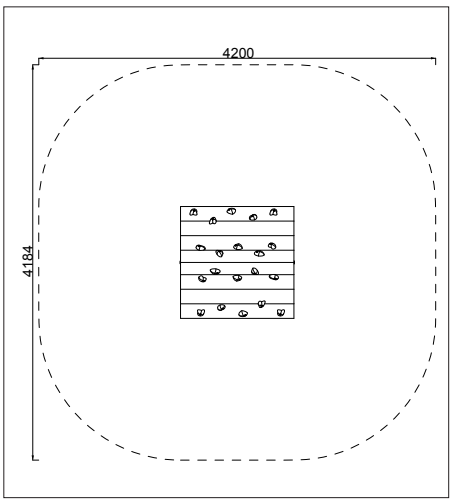

ALTERNATIVE PRODUCT

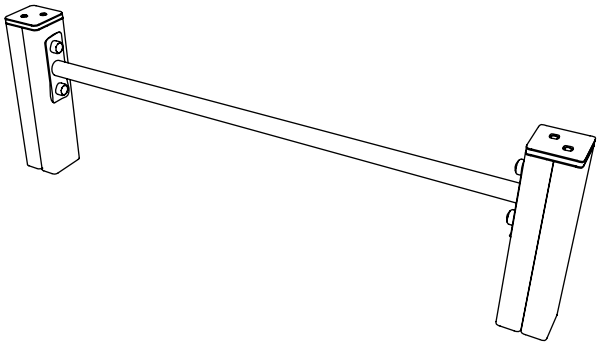

NUR124 - BALANCE BAR

INSTALLERS REQUIRED	2
TIME REQUIRED	2 HOURS
FOUNDATIONS	0.3M³
FREE FALL HEIGHT	0.62M
PRODUCT DIMENSIONS	H - 0.62M, W - 1.2M, D - 1.2M

01244 375 627 sales@creativeplayuk.com www.creativeplayuk.com