JC101- JUNGLE CLIMBER MINI
Installation Instructions

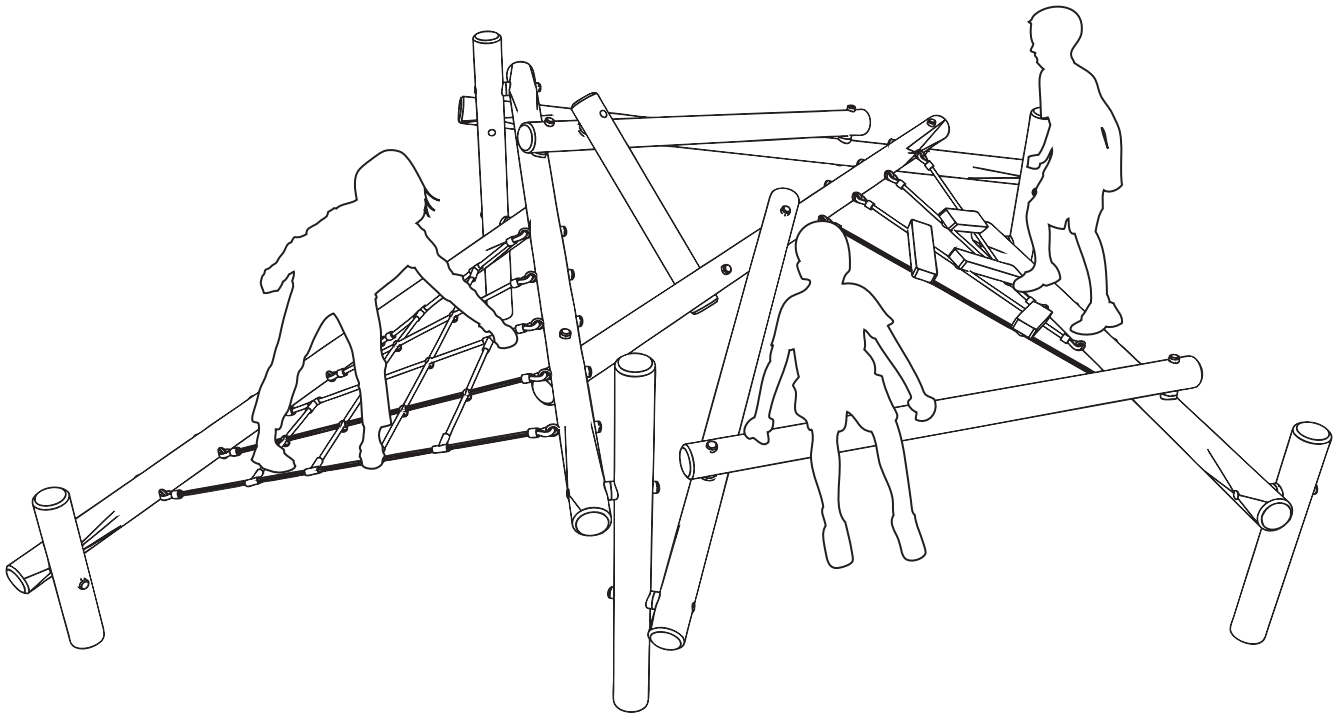

PARTS REQUIRED

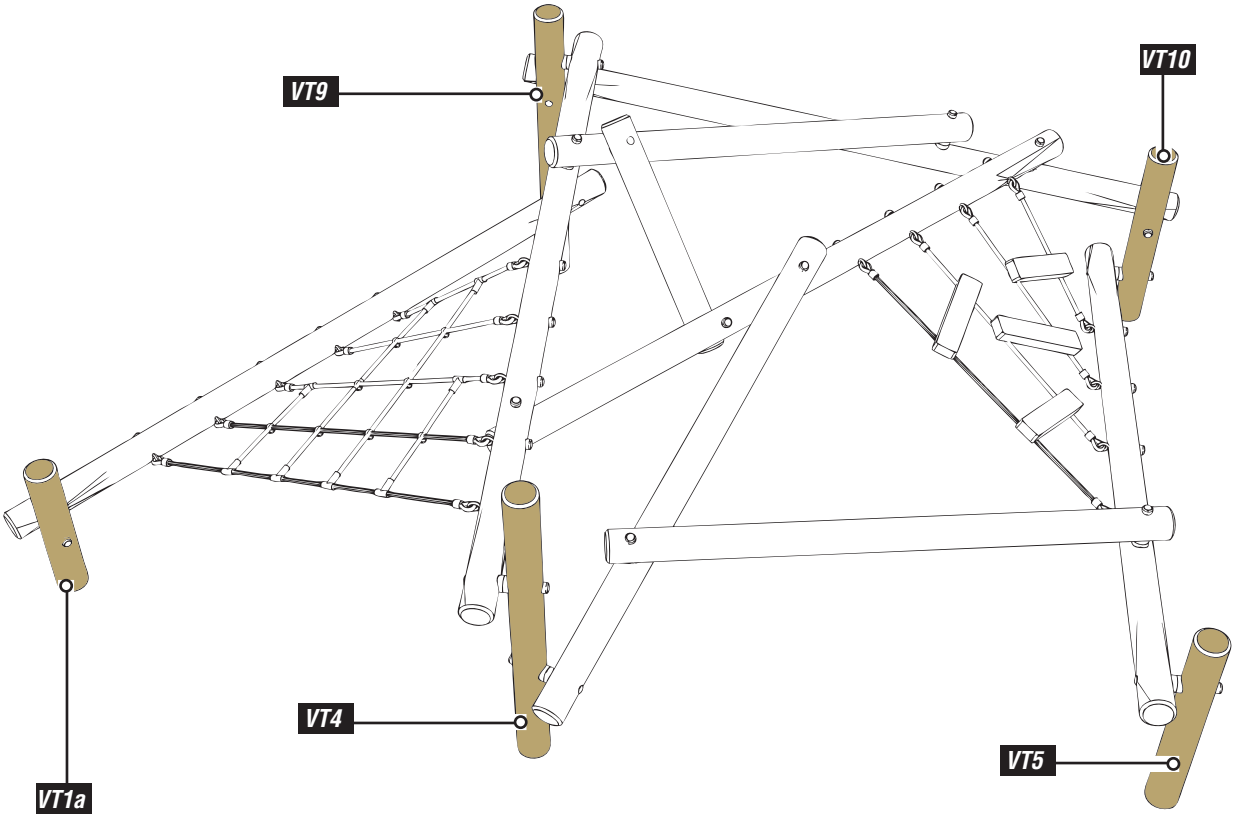

Vertical Timbers

VT1a - QTY - 1 *125mm dia @ 1430mm (1 x holes & chamfer 1 end)*

(VT timbers below - VT4/5/9/10 - are identical to those of JC102 hence CODING)

VT4 - QTY - 1 *125mm dia @ 2215mm (1 x holes & chamfer 1 end)*

VT5 - QTY - 1 *125mm dia @ 1700mm (1 x holes & chamfer 1 end)*

VT9 - QTY - 1 *125mm dia @ 2215mm (2 x holes & chamfer 1 end)*

VT10 - QTY - 1 *125mm dia @ 1700mm (2 x holes & chamfer 1 end)*

(ALL POST WILL BE LABELLED)

PARTS REQUIRED

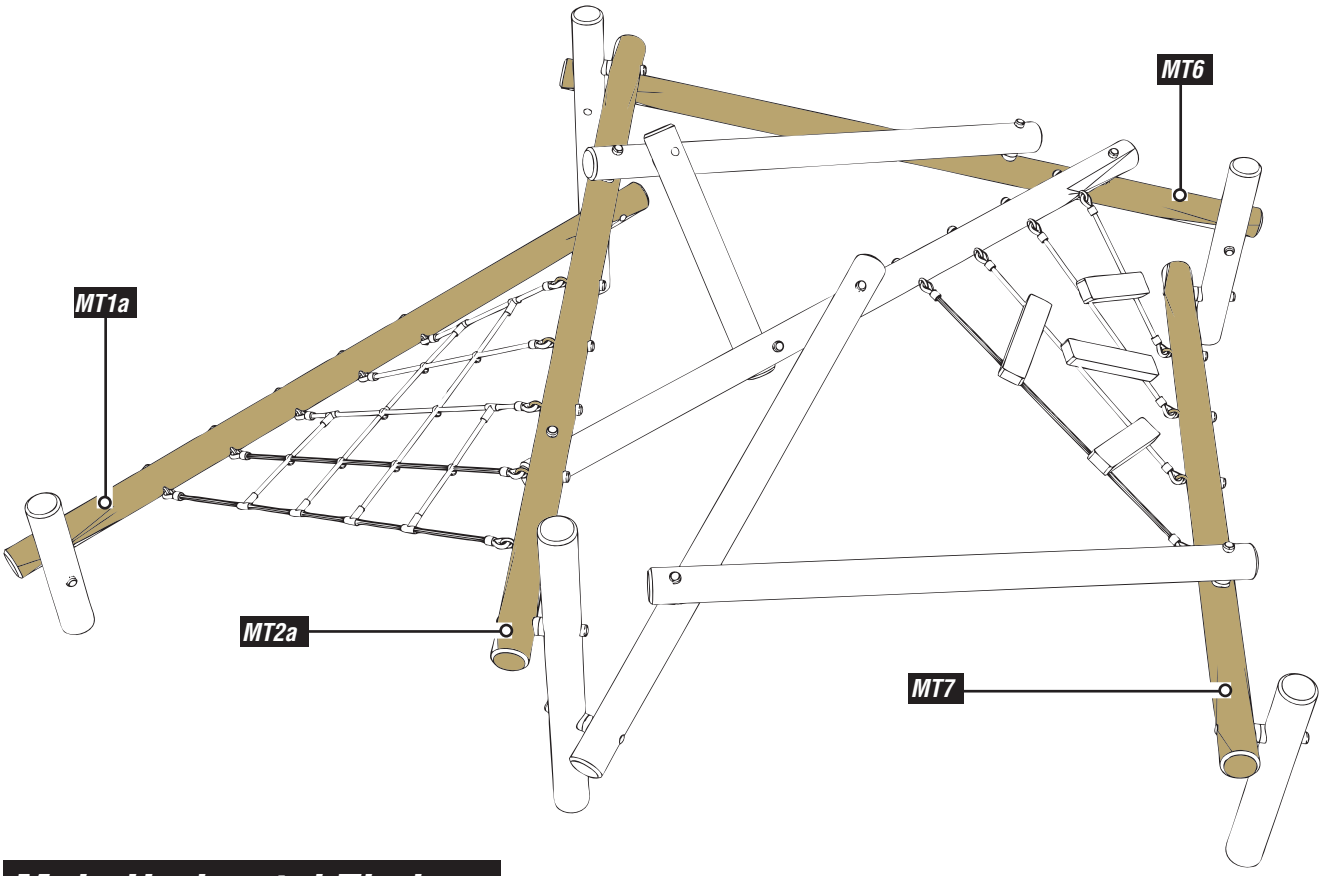

Main Horizontal Timbers

MT1a - QTY - 1 *125mm dia @ 3000mm (7 x holes & chamfer BOTH ENDS)*

MT2a - QTY - 1 *125mm dia @ 3000mm (7 x holes & chamfer BOTH ENDS)*

(MT timbers below - MT6/7 - are identical to those of JC102 hence CODING)

MT6 - QTY - 1 *125mm dia @ 3000mm (2 x holes & chamfer BOTH ENDS)*

MT7 - QTY - 1 *125mm dia @ 3000mm (7 x holes & chamfer BOTH ENDS)*

(ALL POST WILL BE LABELLED)

PARTS REQUIRED

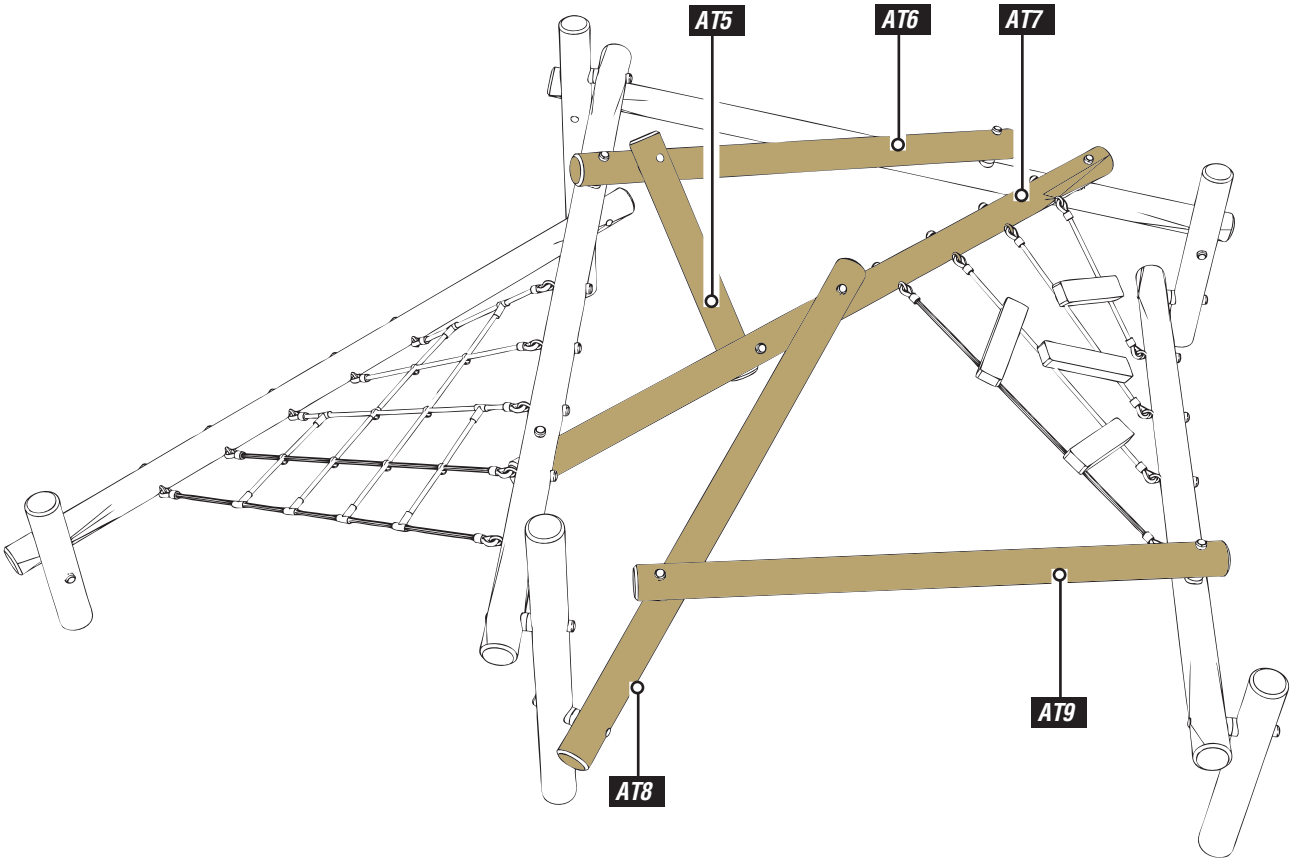

Additional Timbers

(AT timbers below - AT5/6/7/8/9 - are identical to those of JC102 hence CODING)

AT5 - QTY - 1 *125mm dia @ 1013.5mm (2 x holes & chamfer BOTH ENDS)*

AT6 - QTY - 1 *125mm dia @ 2037mm (1 x holes & chamfer BOTH ENDS)*

AT7 - QTY - 1 *125mm dia @ 3100mm (4 x holes & chamfer BOTH ENDS)*

AT8 - QTY - 1 *125mm dia @ 2271mm (1 x holes & chamfer BOTH ENDS)*

AT9 - QTY - 1 *125mm dia @ 2129mm (1 x holes & chamfer BOTH ENDS)*

(ALL POST WILL BE LABELLED)

PARTS REQUIRED

NET CLIMBER

QTY - 1 ASSEMBLY

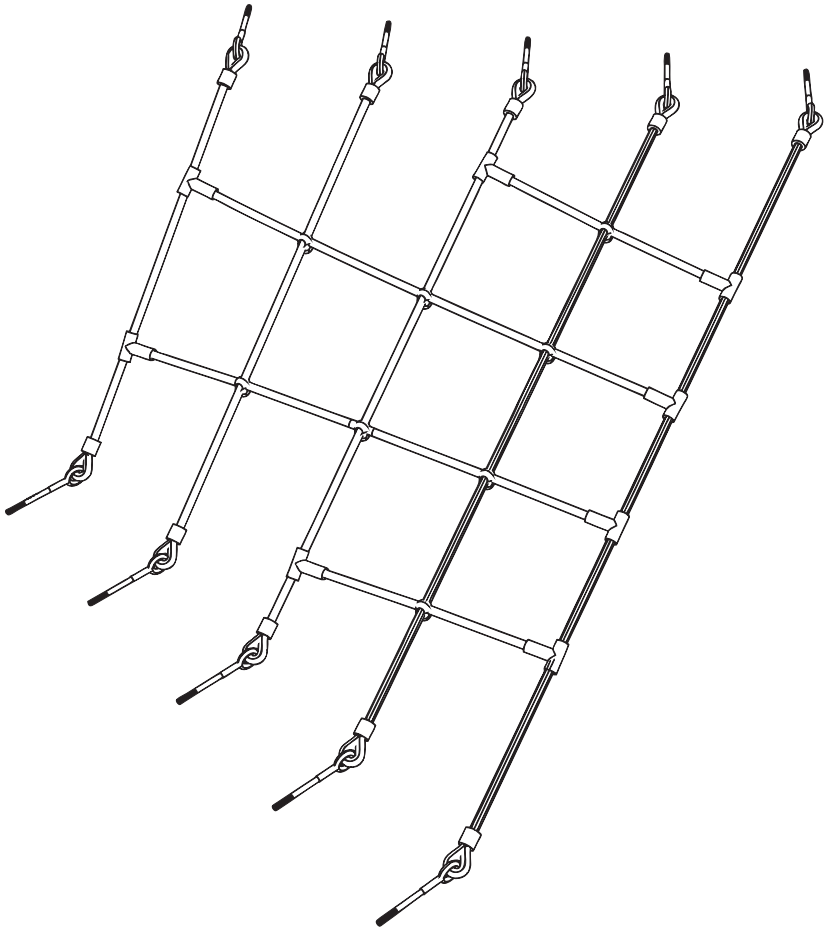

NET + BLOCKS

SUPPLIED LOOSE
Consists of…

T1 / T2 / T3 / T4 timbers
R1 / R2 / R3 / R4 Ropes

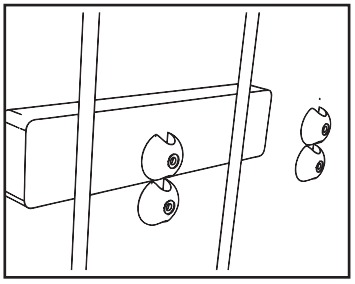

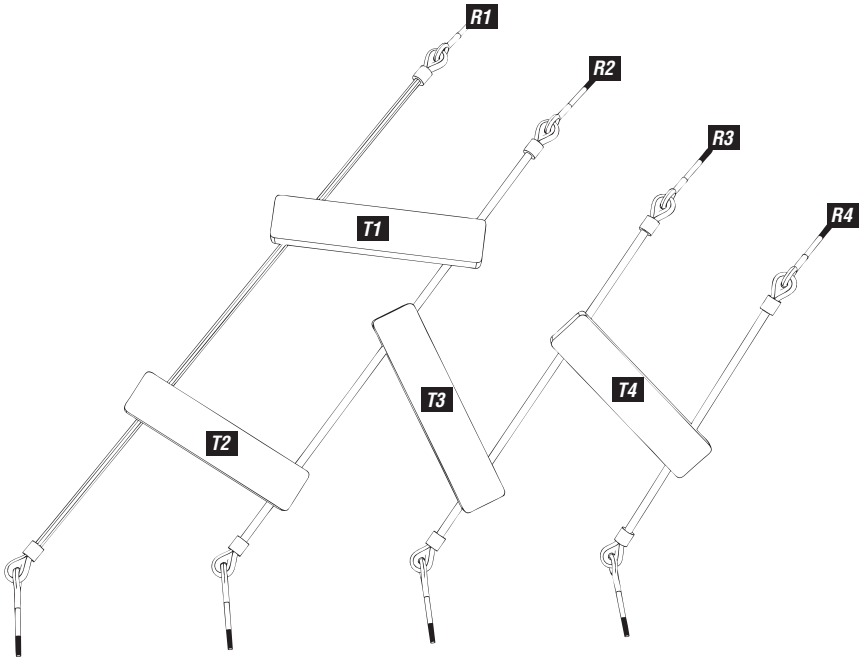

PARTS REQUIRED

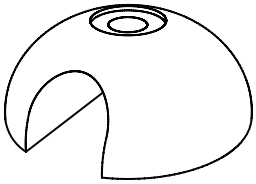

x16

(POLY HALF)

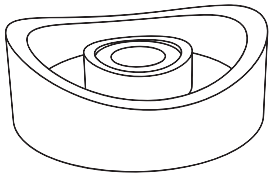

120 label is shown on the inside **x36**

120 Distance Pieces

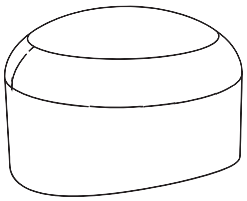

NOT STANDARD END CAP - has a radius cut into it **x36**

Covered end cap R60

x18

M12 x 300 Cup sq bolts

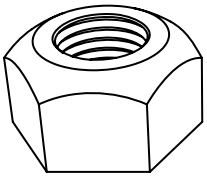

x18

Nylocs M12

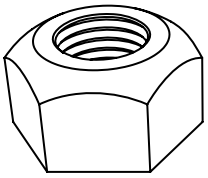

x18

Nylocs M10

SPECIFIC JUNGLE CLIMBER TOOLS

x1 ***(14mm - Long combination auger bit - 400mm)***
To be used for DRILLING THROUGH 2 x 125mm dia timbers

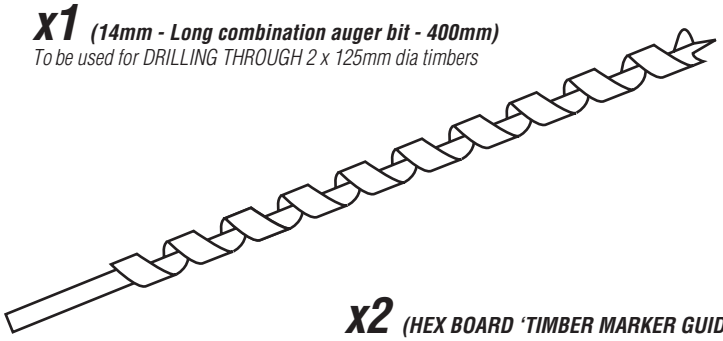

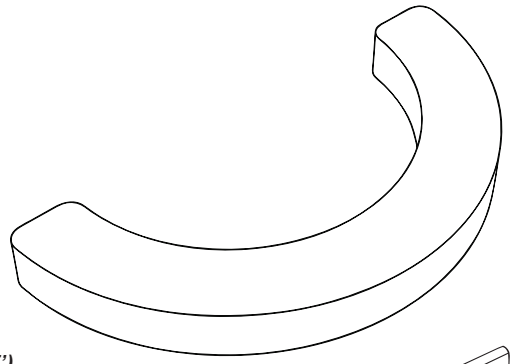

x2 ***(HEX BOARD 'TIMBER MARKER GUIDE')***
To be used for MARKING the 125mm dia timbers

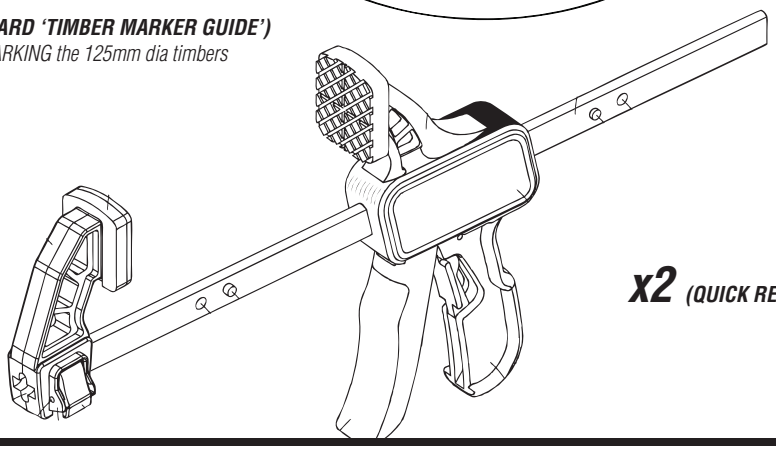

x2 ***(QUICK RELEASE CLAMPS)***

FOUNDATIONS (DISTANCES)

FOUNDATIONS 400mm x 400mm x 750

***REMEMBER - 750mm below FINISHED GROUND LEVEL - if WETPOUR / MULCH / PLAYSAFE is to be laid amend as required**

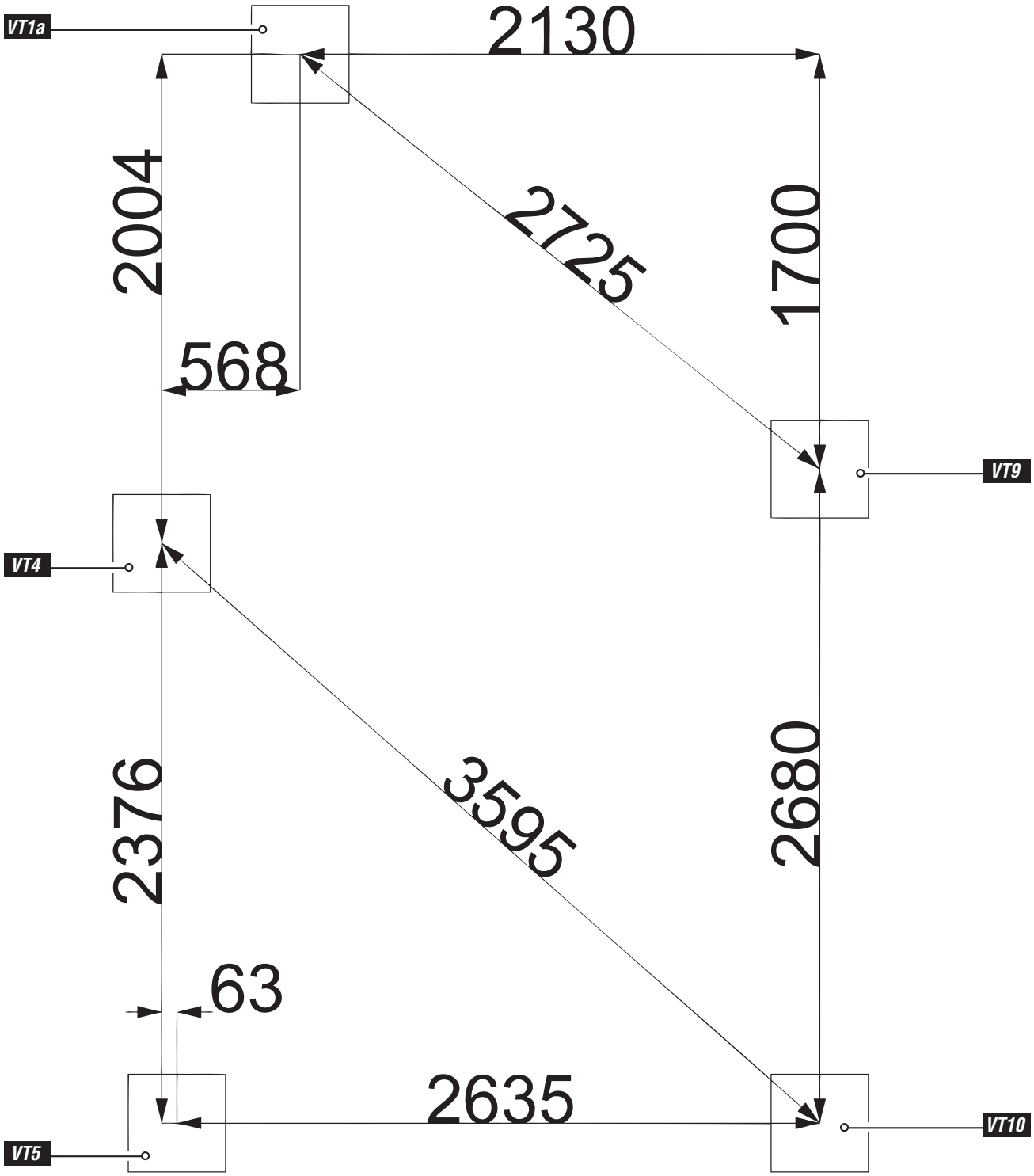

REF: JC101

FOUNDATION DETAILS

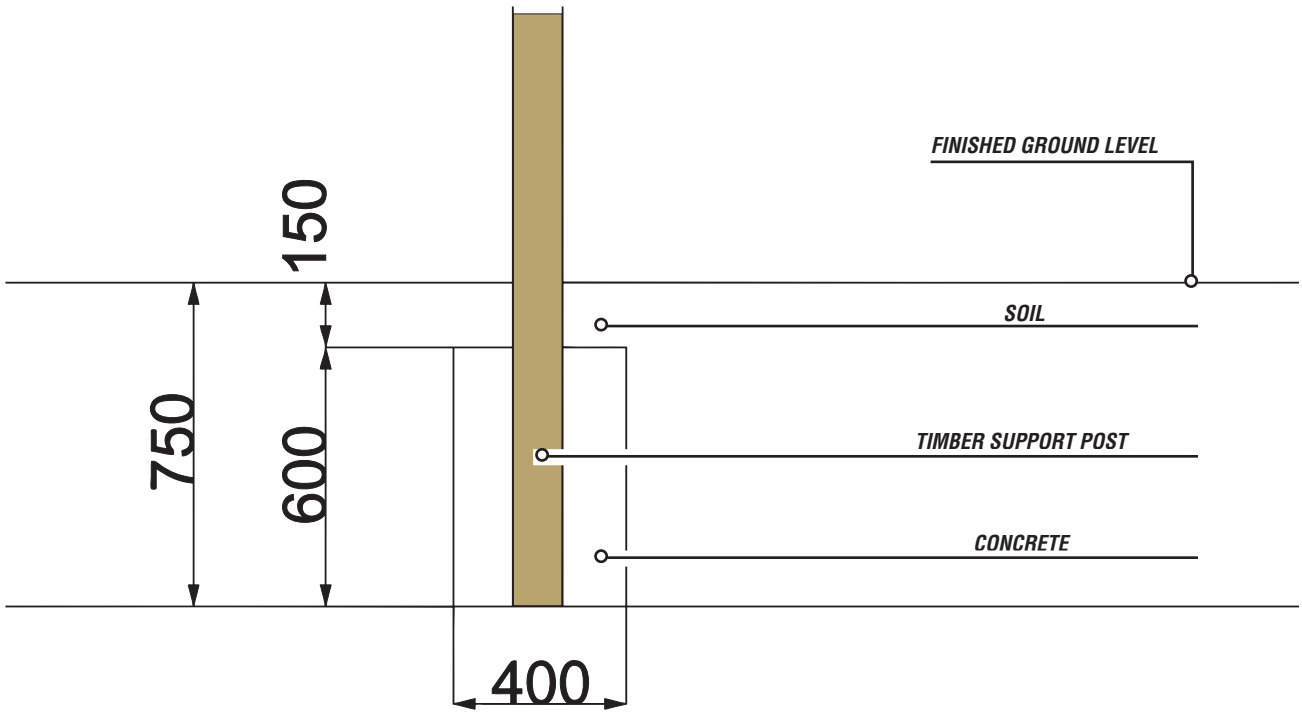

SURFACING DETAILS

RED DIMENSIONS CENTRE OF VERTICAL TIMBERS TO SURFACING

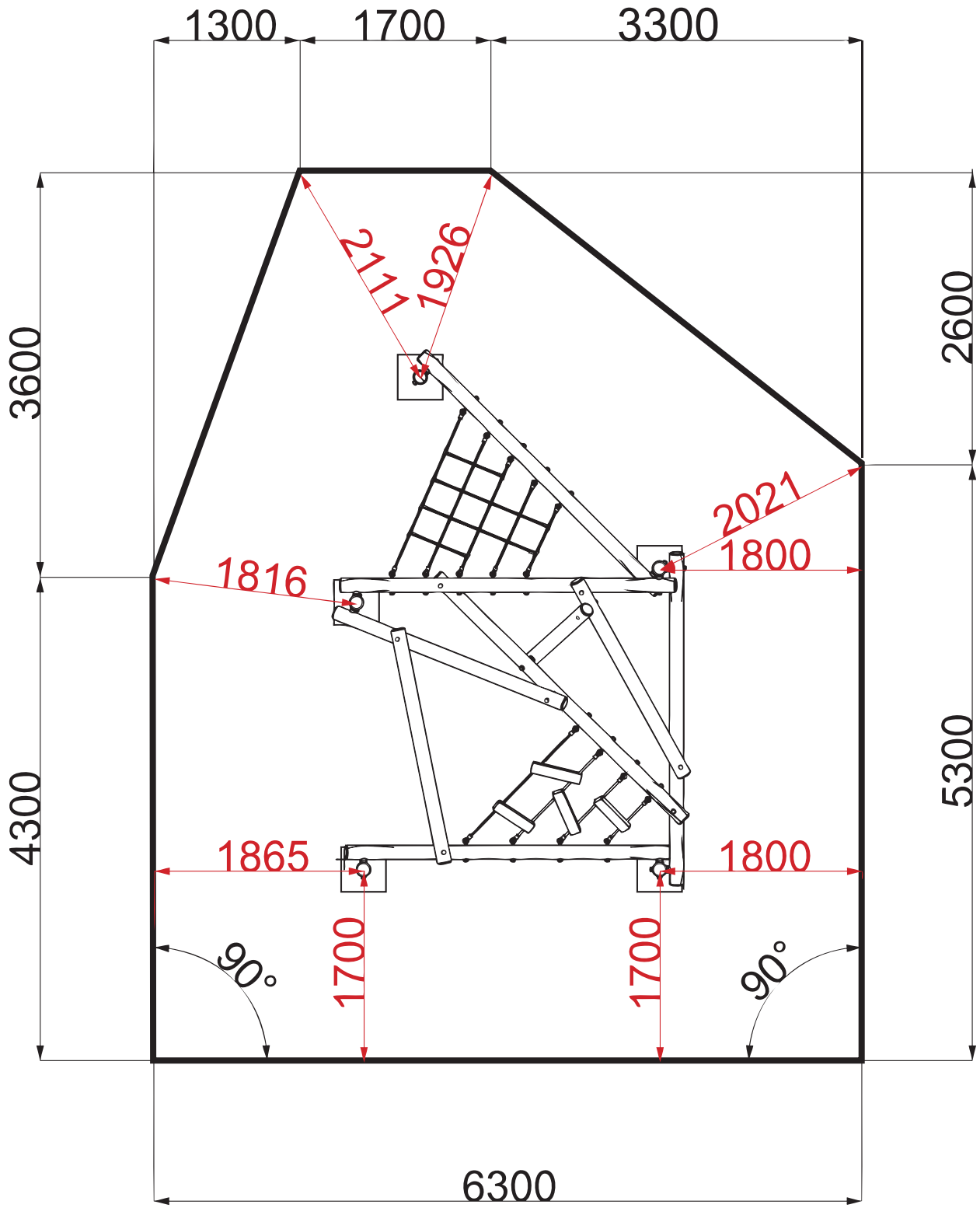

INSTALLATION INSTRUCTIONS

1 Construct the main assembly BEFORE laying concrete foundations STEPS 1 to 10

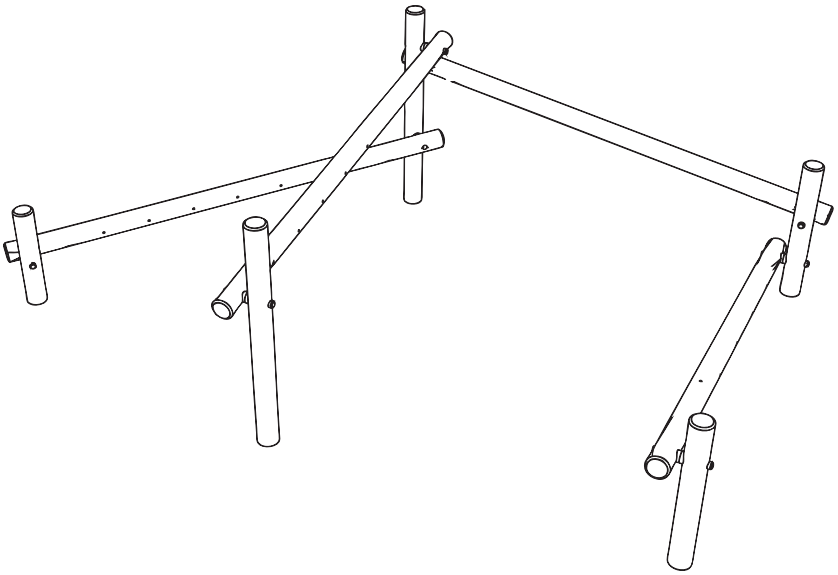

NOTES:

- All timbers bolted together MUST include 2 x DISTANCE PIECES

TIMBERS DO NOT BOLT DIRECTLY TO EACH OTHER

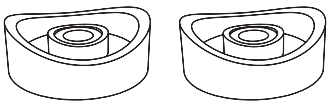

- Install STEP by STEP

TO ENSURE THE CORRECT HOLES ARE USED AT EACH STAGE

- TAKE EXTRA CARE WHEN DRILLING

TAKE EXTRA PRECATION WHEN DRILLING THE TIMBERS - ONCE POSITIONED REMEMBER TO ALLOW FOR THE DISTANCE PIECES AND MARK ACCORDINGLY (distance between timbers 27mm)

- DRILLING THROUGH THE CENTRE

ALTHOUGH SOME HOLES ARE DRILLED AT AN ANGLE - THE HOLE IS DRILLED THROUGH THE CENTRE OF THE TIMBER (LEAVING 62.5mm either side)

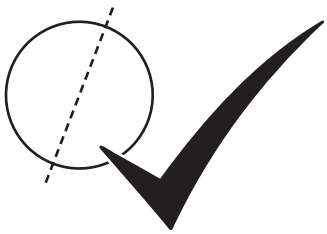

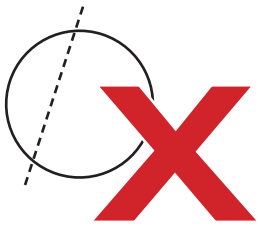

2 Position the VT4 / VT5 / VT9 / VT10 timbers

VERTICAL TIMBERS (VT) ARE CHAMFERED AT ONE END ONLY, ENSURE THIS IS NOT IN THE GROUND

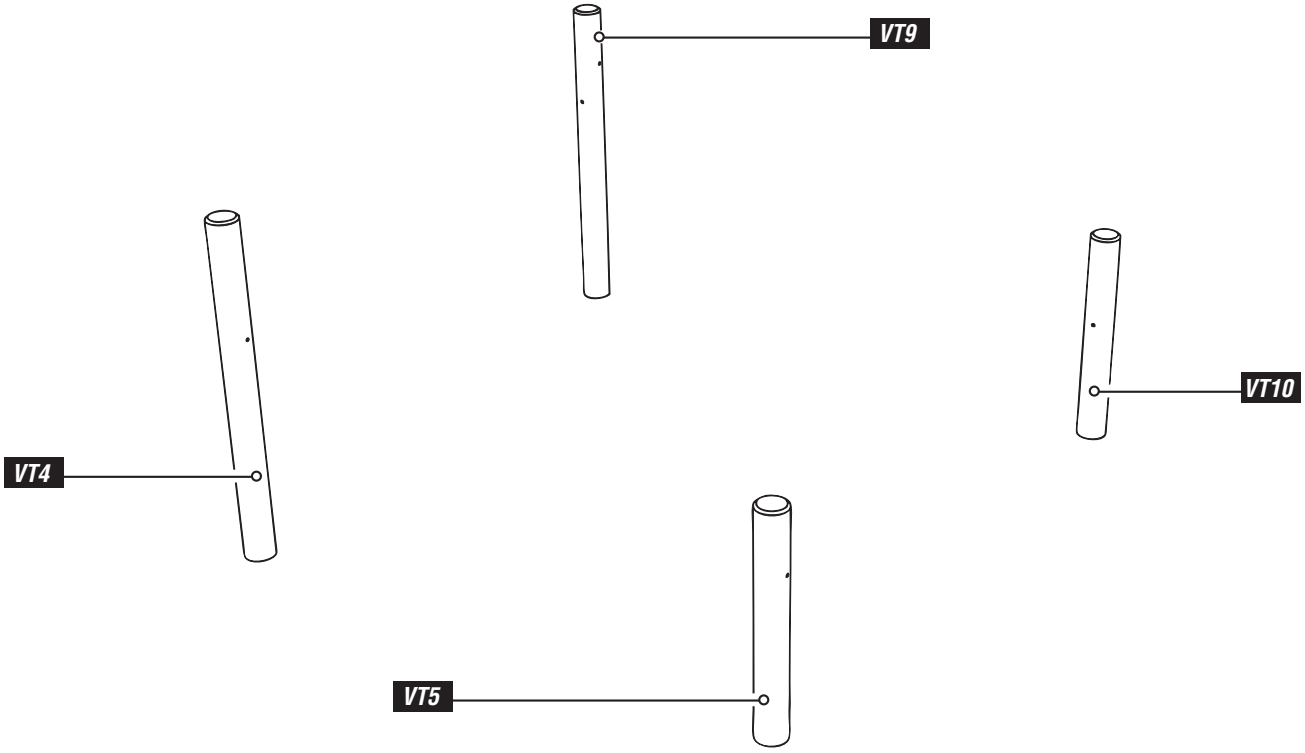

3 Attach MT7 to VT5 / VT10 timbers

USING M12 X 300 CUP SQUARE BOLTS / NYLOCS M12 / COVERED END CAP R60 / 120 DISTANCE PIECES

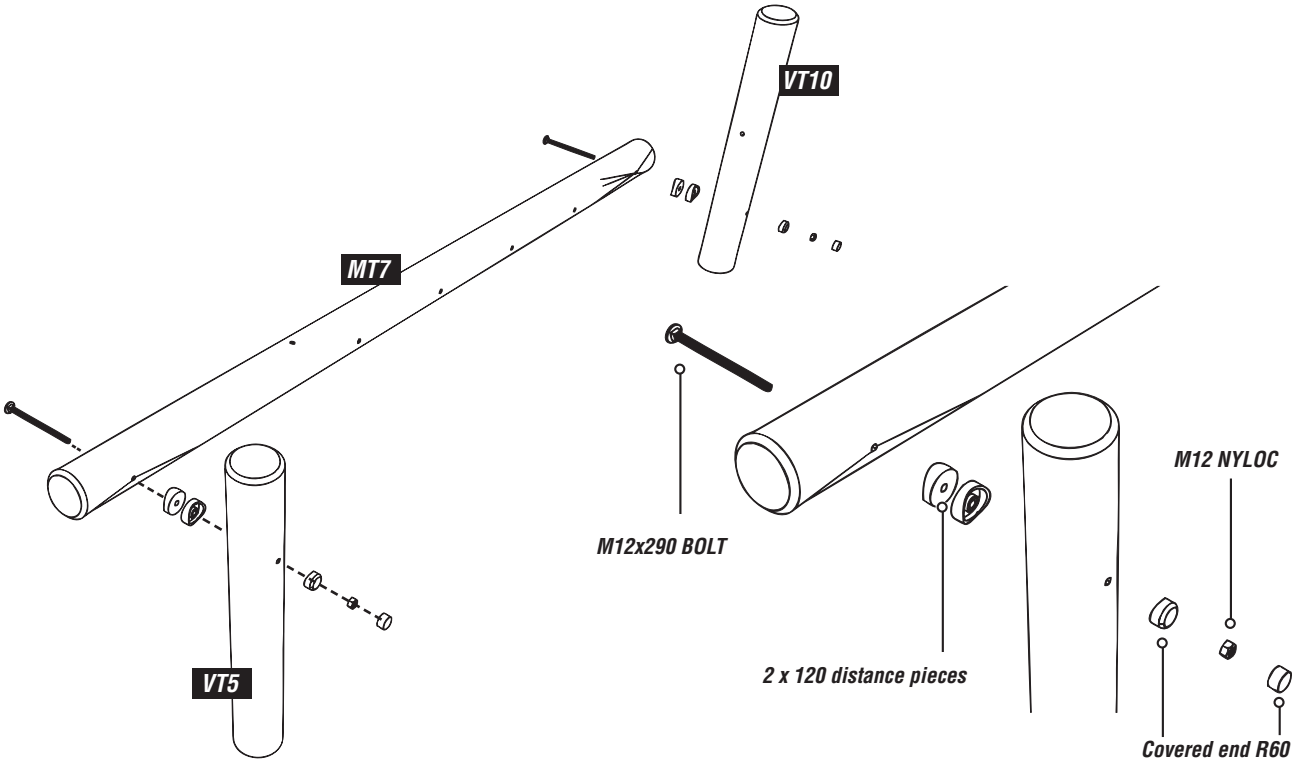

4 ENSURE the positioning of the MT7 is correct

THE 4 REMAINING HOLES IN THE MT7 ARE POSITIONED CLOSER TO THE VT10 TIMBER

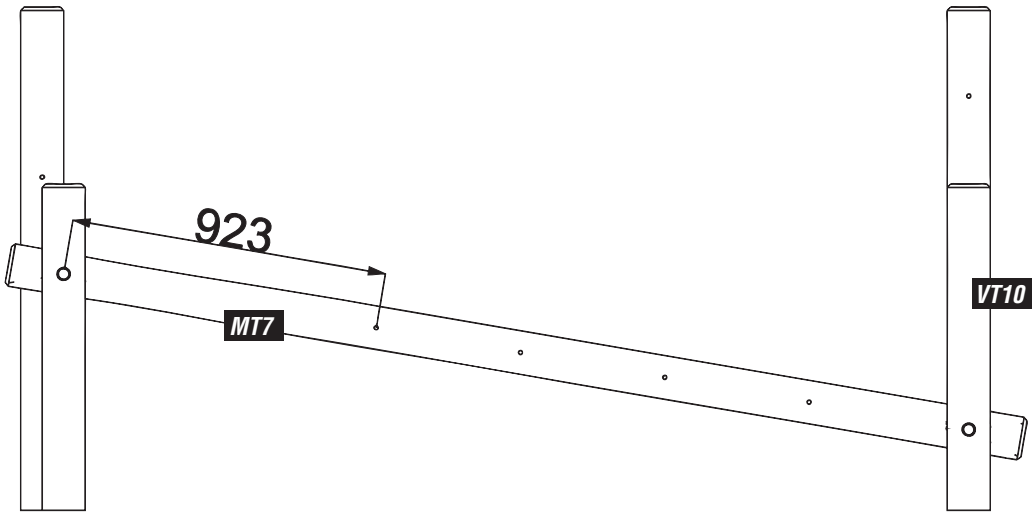

5 Attach MT6 to VT9 / VT10 timbers

USING M12X300 CUP SQUARE BOLTS / NYLOCS M12 / COVERED END CAP R60 / 120 DISTANCE PIECES

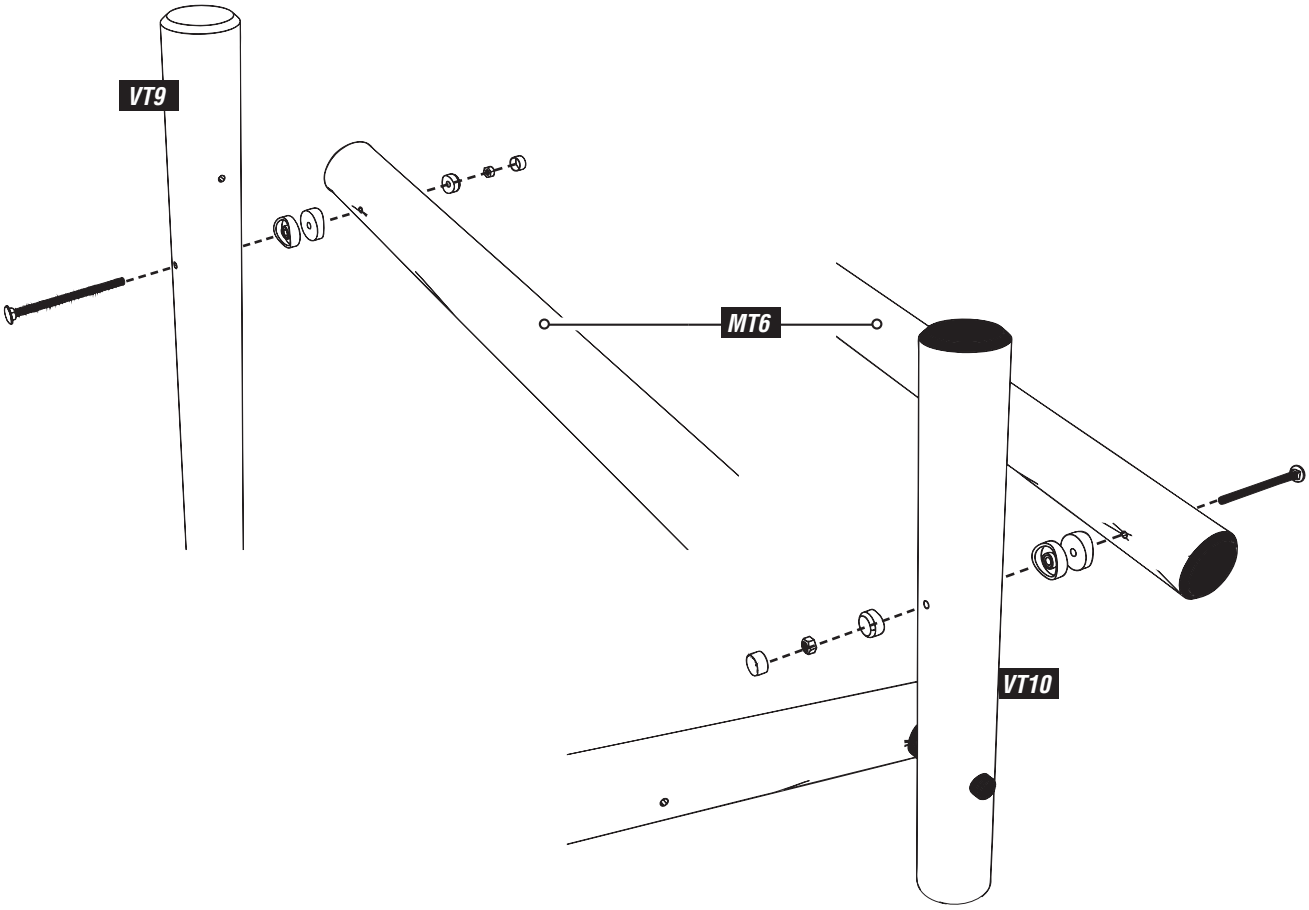

6 ENSURE the positioning of the MT6 is correct

THERE IS A REMAINING HIGHER HOLE IN THE VT9 (IN THE OPPOSITE DIRECTION) CIRCLED RED BELOW

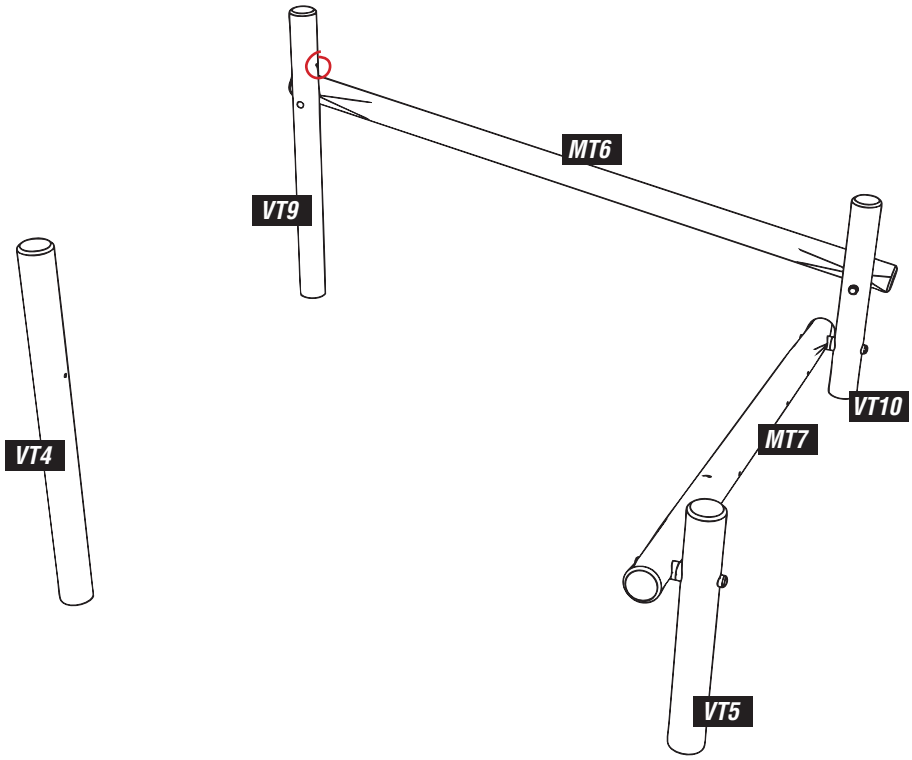

7 Attach MT2a to VT4 / VT9 timbers

USING M12 X 300 CUP SQUARE BOLTS / NYLOCS M12 / COVERED END CAP R60 / 120 DISTANCE PIECES

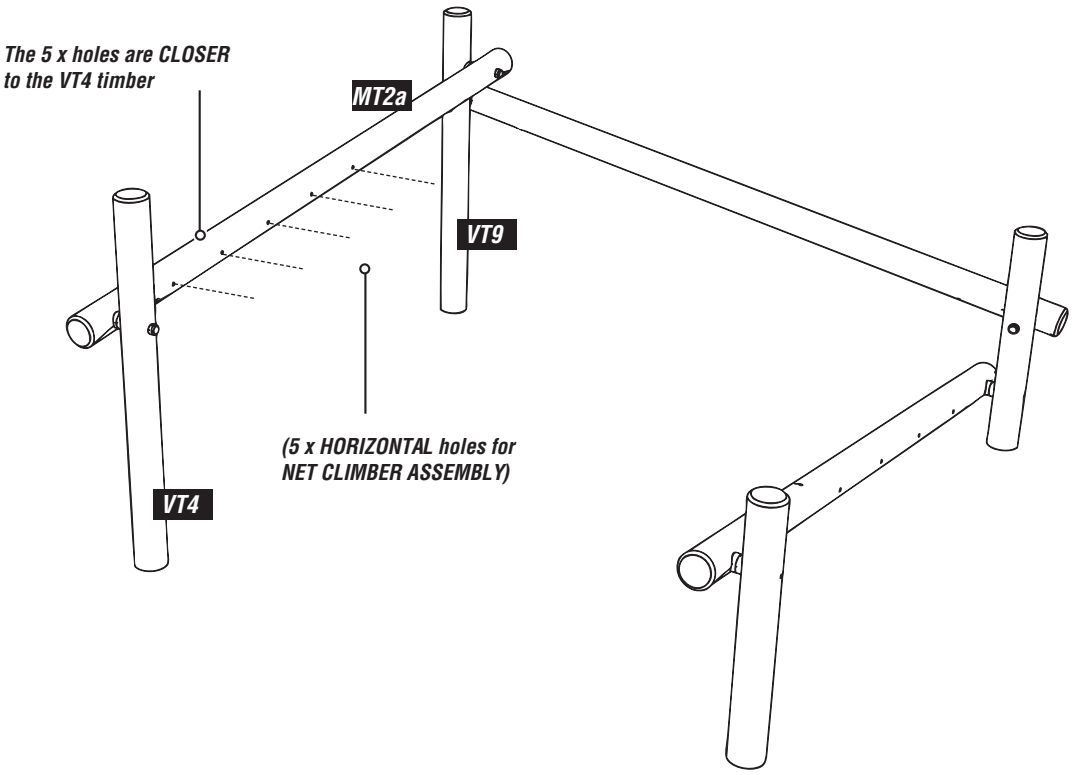

8 Position the VT1a timber AND attach the MT1a to the VT1a timber (1 side only circled red)

VERTICAL TIMBERS (VT) are CHAMFERED at one end only - ENSURE THIS END IS NOT IN THE GROUND

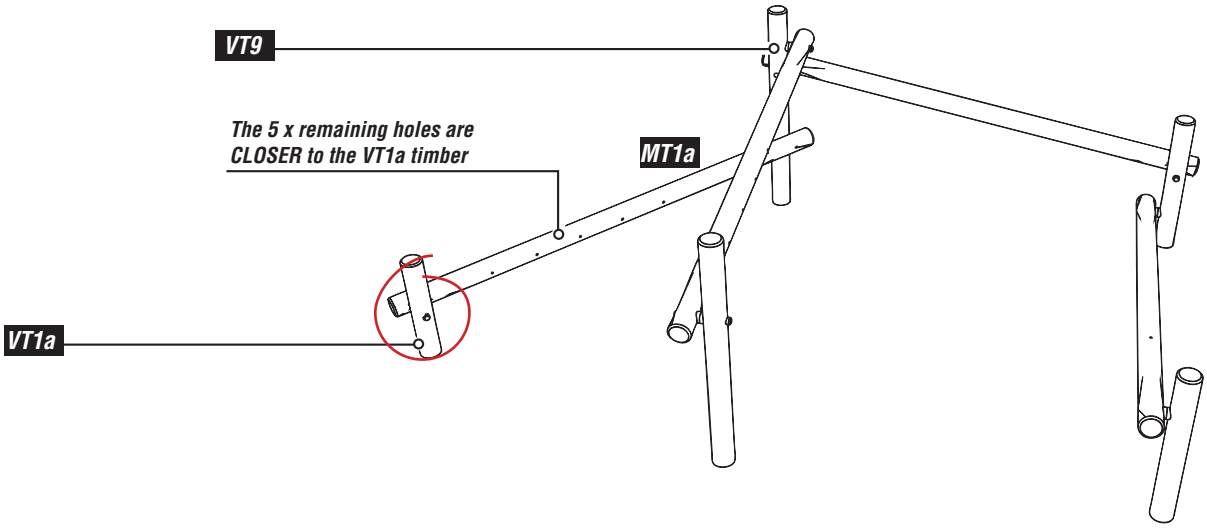

9 DRILL the VT9 timber, using the PRE-DRILLED HOLE in the MT1a as a guide

Once drilled use M12x300 CUP SQUARE BOLTS / 'NYLOCS' M12 / COVERED END CAP R60 / 120 DISTANCE PIECES

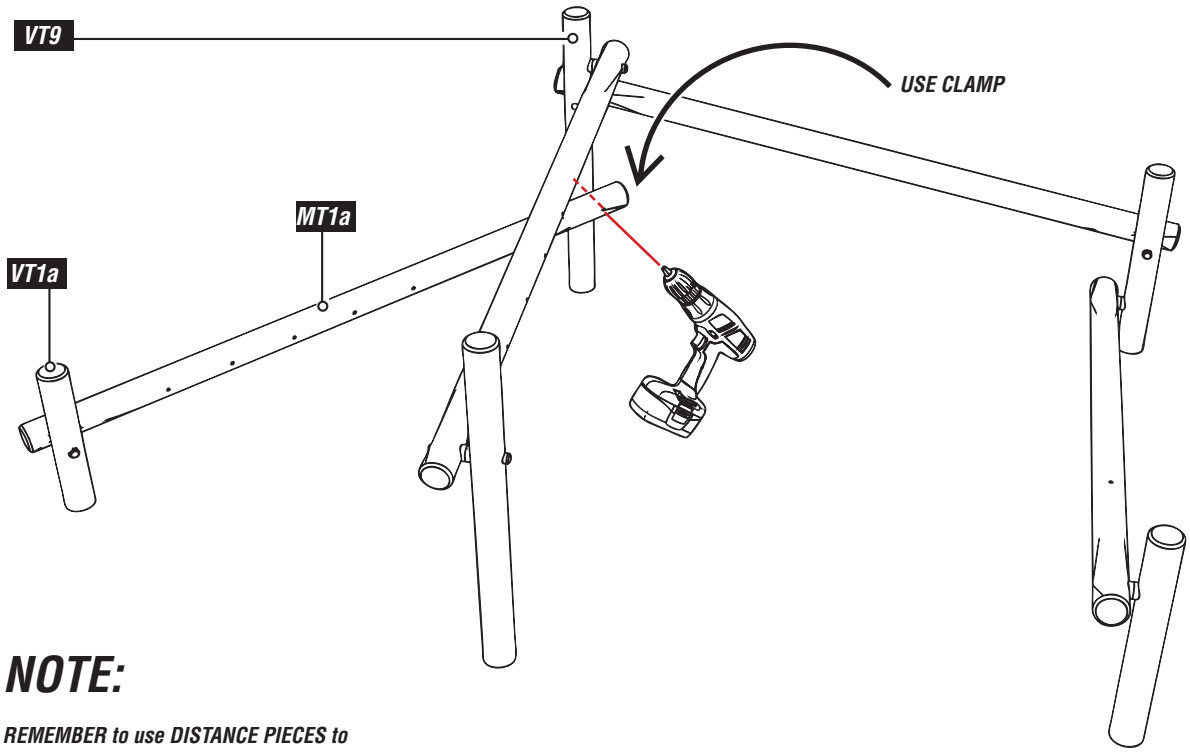

NOTE:

REMEMBER to use DISTANCE PIECES to ensure the hole is positioned correctly

10 The main assembly is now complete

Concrete foundations can now be laid - the main assembly means that ALL holes are LOCKED in the correct place

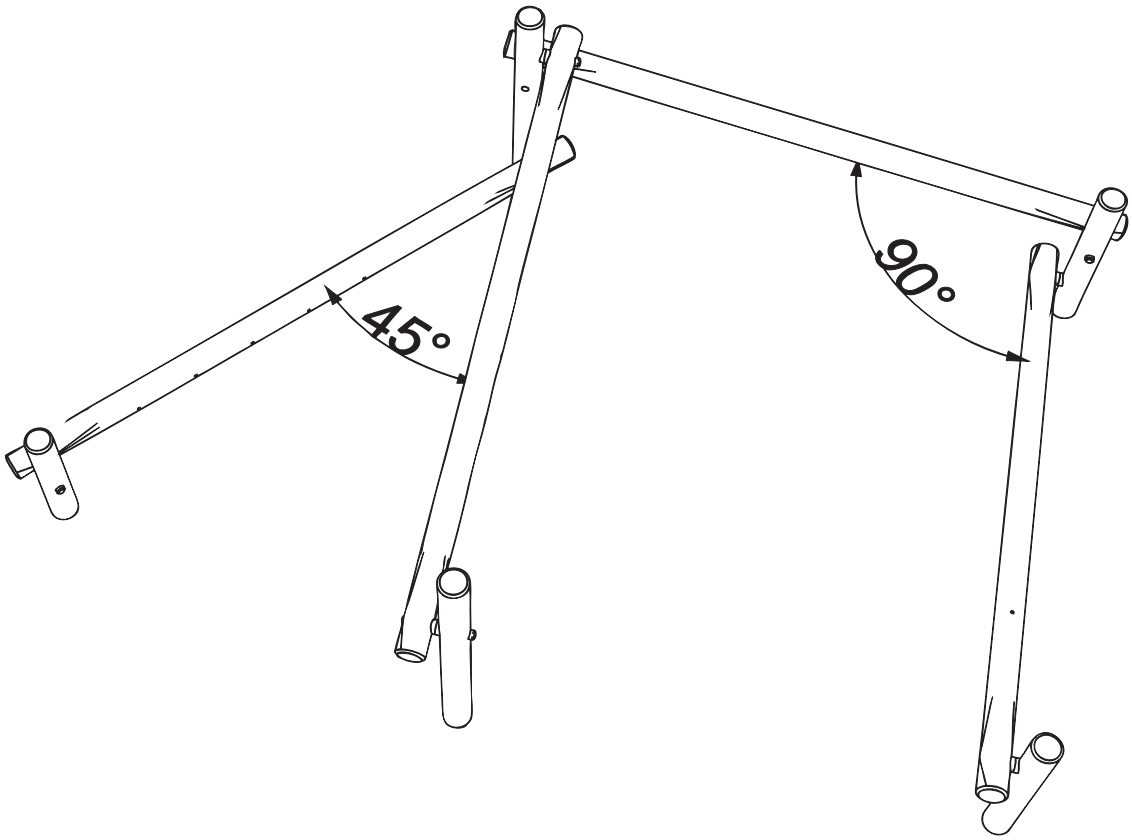

MARK / CLAMP / DRLL / ATTACH

A - Use the 'TIMBER MARKER GUIDE' to mark the MT6 and MT2a Timbers

Mark a line around the MT2a timber - 825mm from the end as shown NEXT PAGE / Mark a line around the MT6 timber - 1898mm from the as shon NEXT PAGE

B - CLAMP the AT6 timber to the MT2a timber & MT6 timber

REMEMBER to use DISTANCE PIECES to ensure the hole is positioned correctly

C - DRILL the MT2a timber / DRILL the MT6 timber

REMEMBER to use DISTANCE PIECES to ensure the hole is positioned correctly - USE THE PRE-DRILLED HOLE as a guide to drill the MT6

D - ATTACH using *M12 x 290* CUP SQUARE BOLTS / 'NYLOCS' M12 / Covered end cap R60 / 120 Distance pieces*

11 MARK / CLAMP / DRILL / ATTACH AT6

The AT6 is pre-drilled ONE END ONLY - this end sits against the MT6 timber (circled red below)

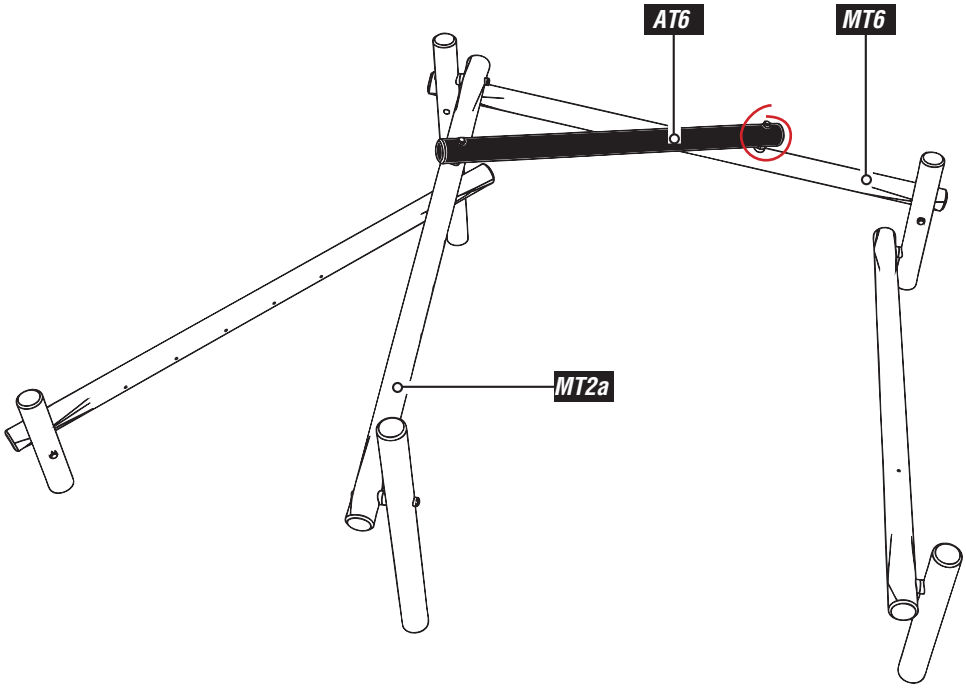

NOTE:

-AT6 is positioned ON TOP of the MT2a and MT6

- Once drilled use M12 x290 CUP SQUARE BOLTS/ NYLOCS M12/ COVERED END CAP R^) /120 Distance pieces*

-AT6 is drilled @ 131MM from the end (non drilled see details below)

AT6 TIMBER HAS BEEN UPDATED TO RESOLVE HEAD ENTRAPMENT

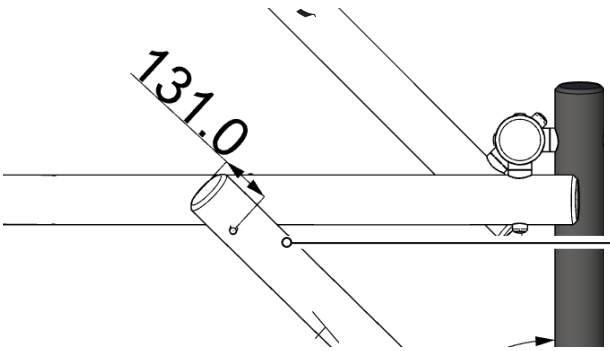

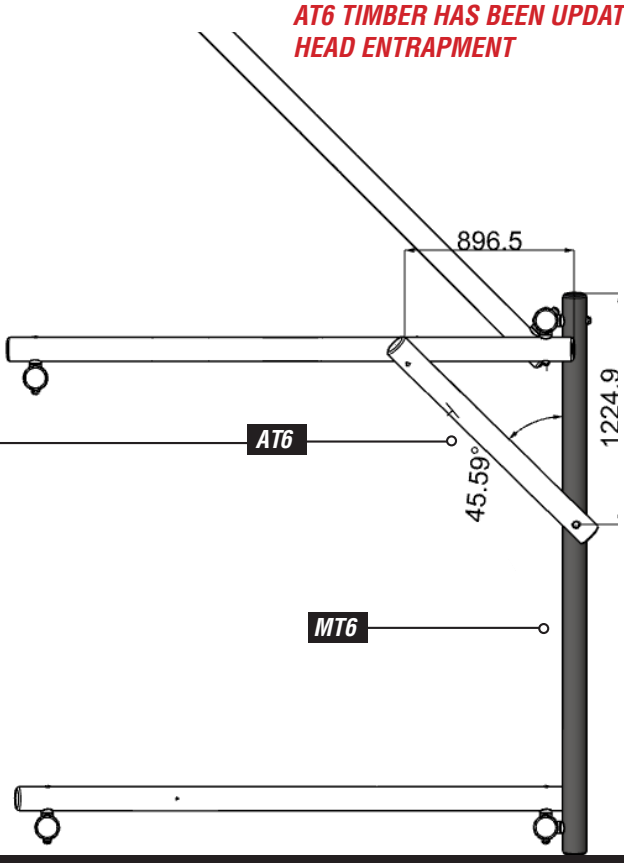

12 MARK / CLAMP / DRILL / ATTACH AT7

The AT7 is pre-drilled FOR THE NET + BLOCKS - These must be positioned 'LEVEL / HORIZONTAL'

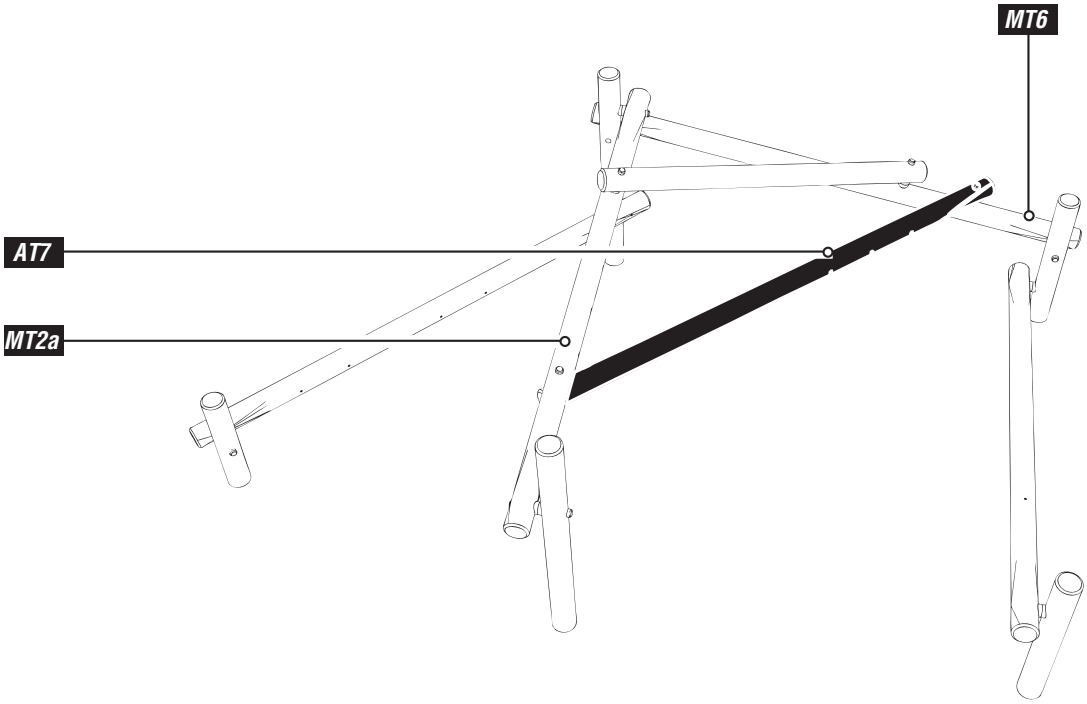

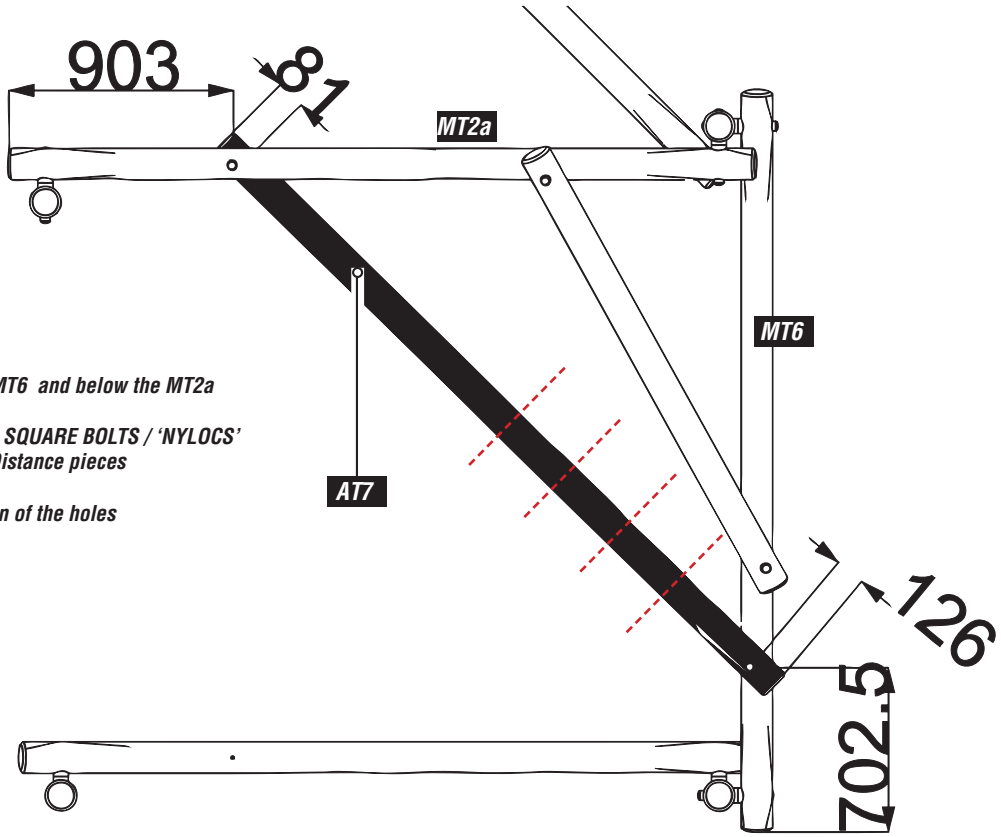

NOTE:

- AT7 is positioned ON TOP of the MT6 and below the MT2a

- Once drilled use M12 x 290* CUP SQUARE BOLTS / 'NYLOCS' M12 / Covered end cap R60 / 120 Distance pieces

- RED DOTTED LINE shows direction of the holes

13 ENSURE the positioning of the AT7 is correct

The red LINES / HOLES MUST BE HORIZONTAL

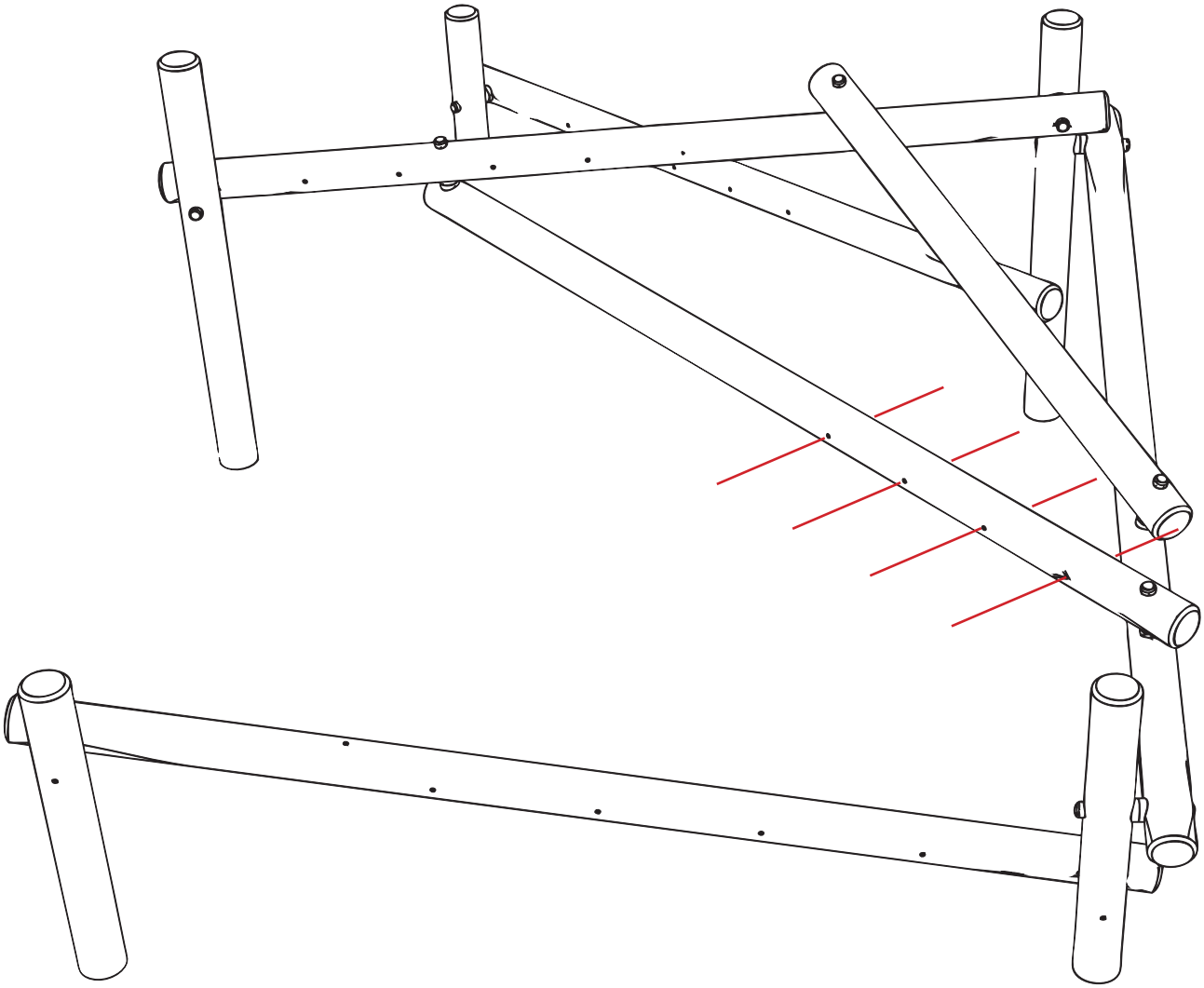

14 MARK / CLAMP / DRILL / ATTACH AT8

The AT8 is pre-drilled ONE END ONLY - this end sits against the VT4 timber (circled RED below)

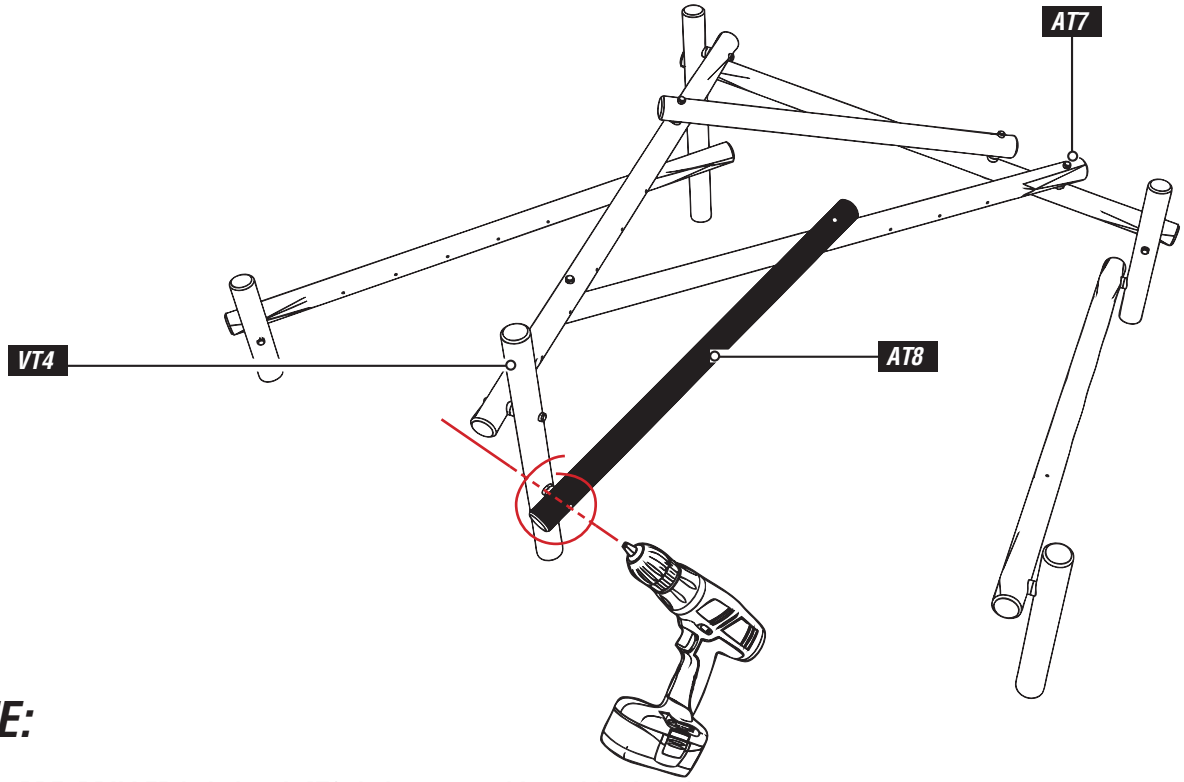

NOTE:

- Use the PRE_DRILLED hole in teh AT8 timber as a guide to drill though the VT4 timber

- Once drilled use M12 x 290 CUP SQUARE BOLTS /NYLOCS / M12 / covered end cap R60 / 120 distance pieces*

- Drill the VT4 first then drill though the AT7 /AT8 timbers

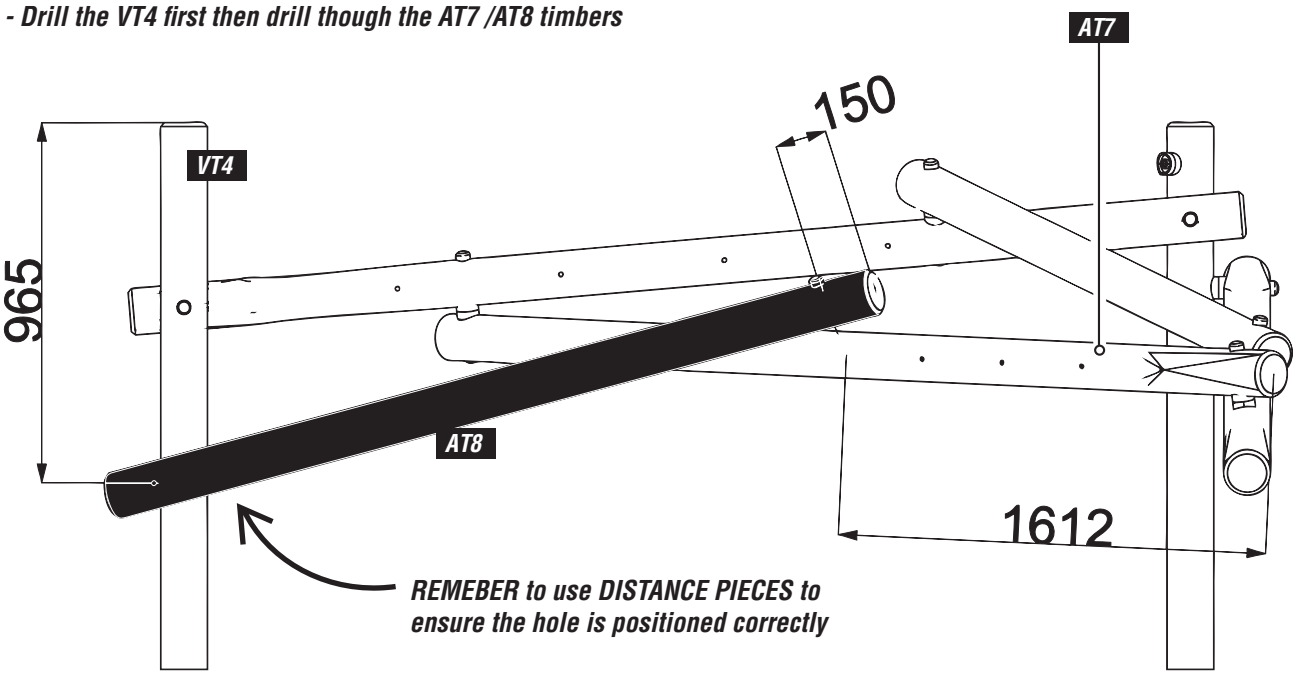

15 MARK / CLAMP / DRILL / ATTACH AT9

The AT9 is pre-drilled ONE END ONLY - this end sits against the MT7 timber (circled RED below)

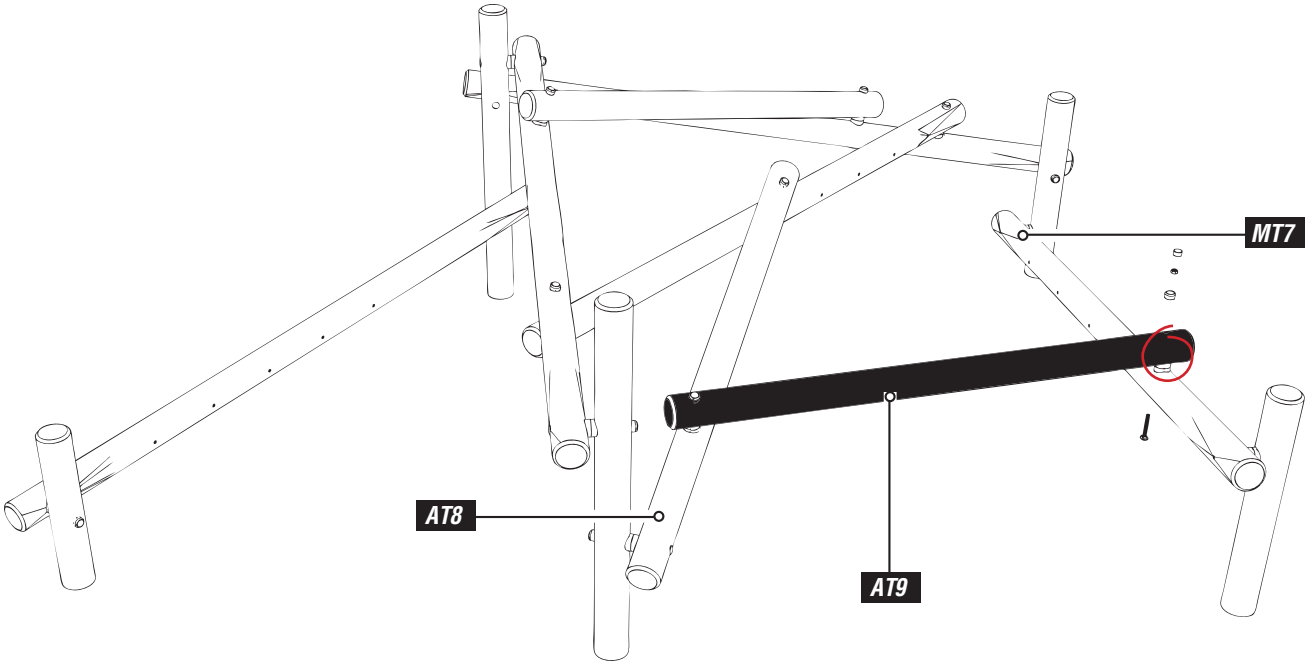

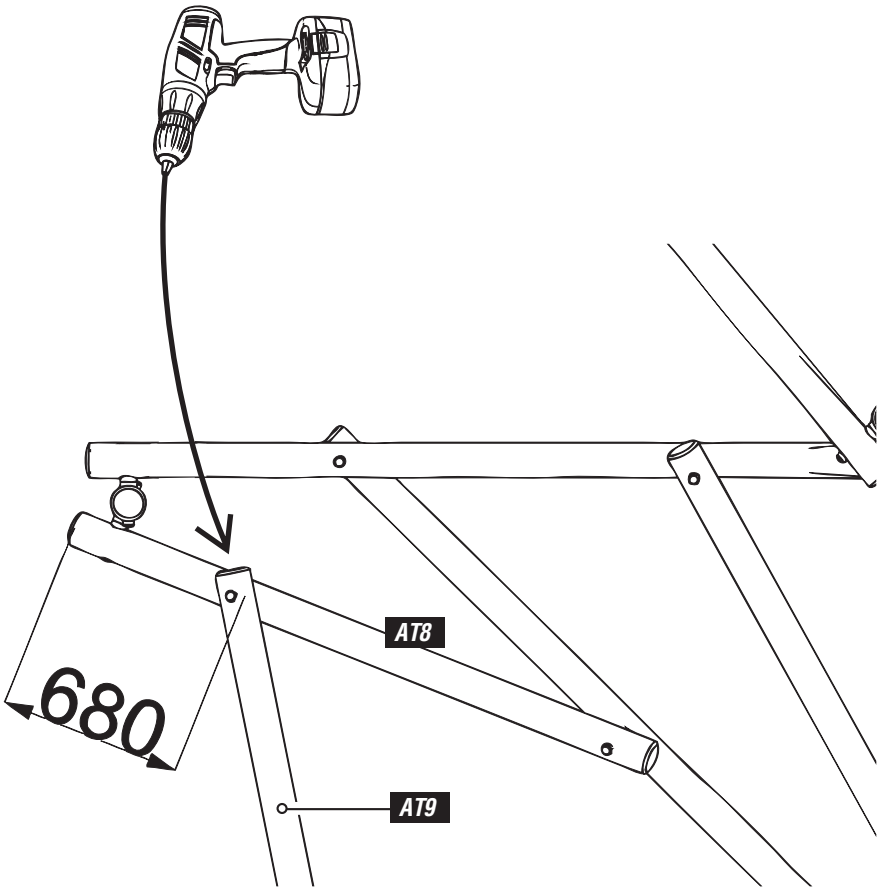

NOTE:

- Use M12 x 290* CUP SQUARE BOLTS / NYLOCS M12 / COVERED end caps R60 / 120 distance pieces - TO ATTACH THE AT9 to the MT& timber

- DRILL the AT9 & AT8 timbers

- Once drilled use the M12 x 290 CUP SQUARE BOLTS / NYLOCS m12 / Covered end caps R60 / 120 distance pieces

16 MARK / CLAMP / DRILL / ATTACH AT5

The AT5 is pre-drilled BOTH ENDS - use the PRE-DRILLED holes as a guide to drill the AT6 & AT7 timbers

AT5 / AT6 has been ammended to resolve head entrapment

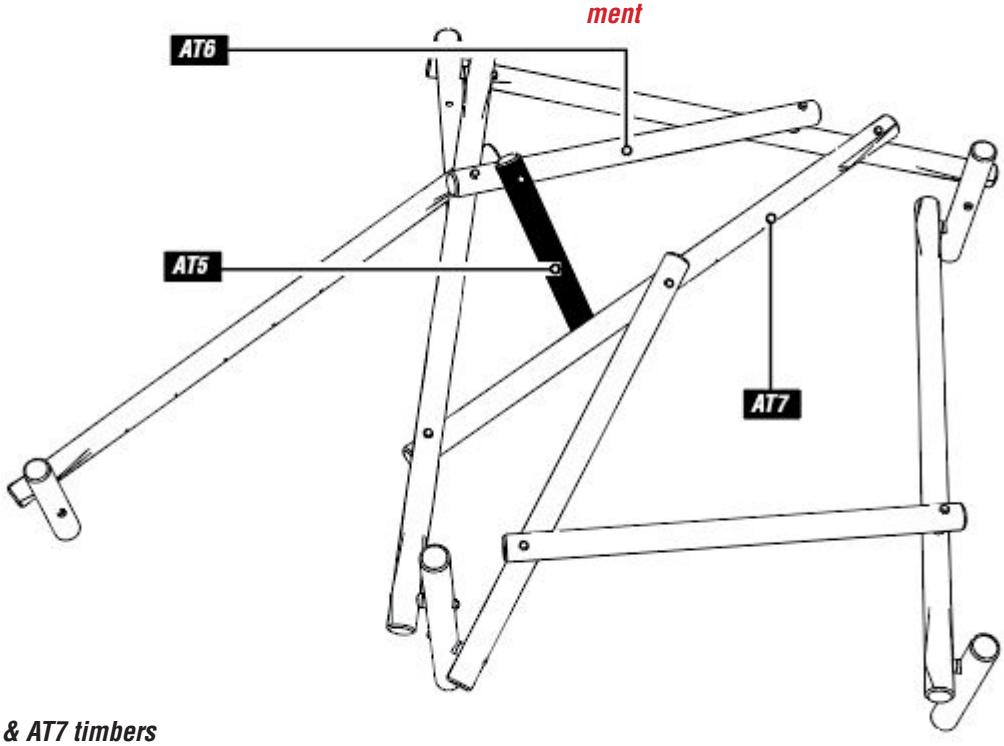

NOTE:

- DRILL the AT6 & AT7 timbers

-Once drilled use M12 x 300 CUP SQUARE BOLTS / NYLOCS M12 / covered end cap R60 / 120 distance pieces

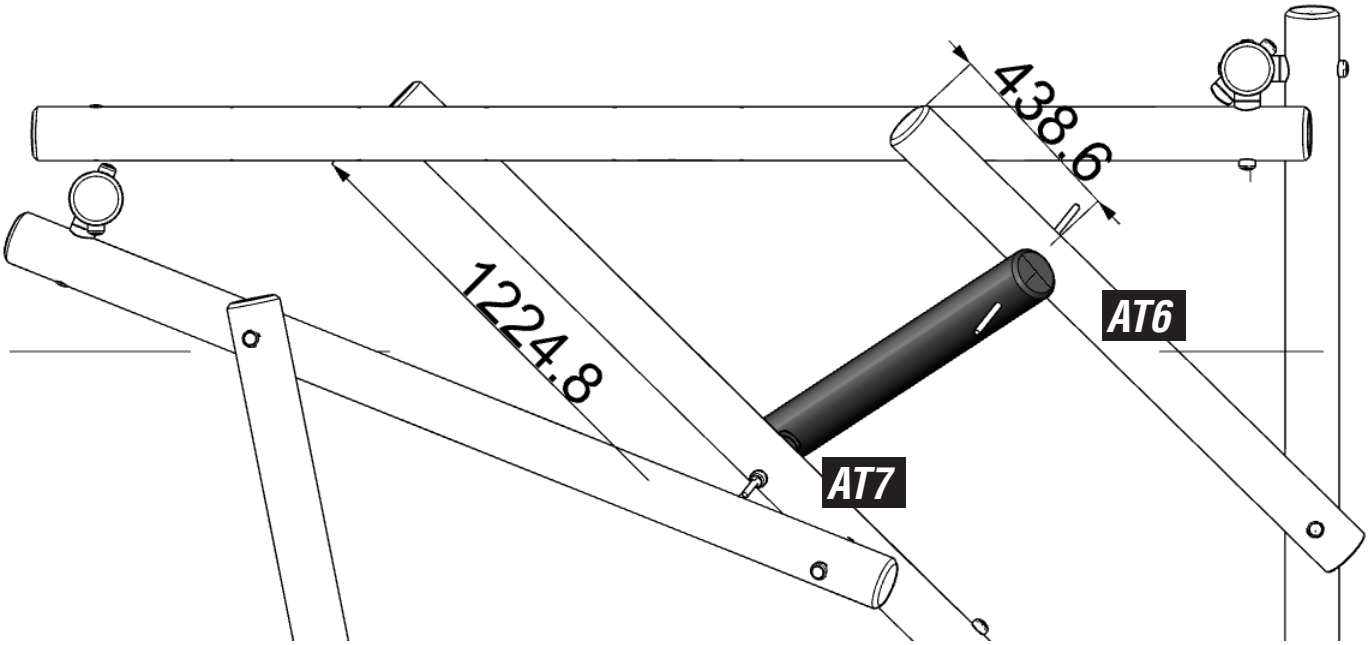

17 Attach the NET CLIMBER assembly

Using M10 NYLOCS and covered end cap R60

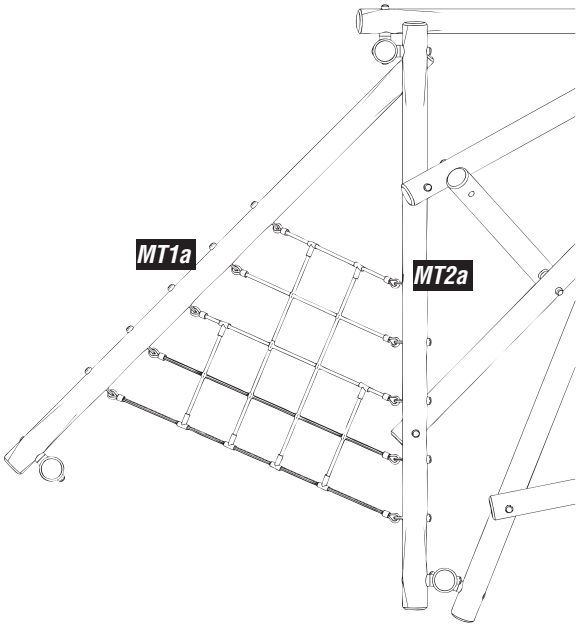

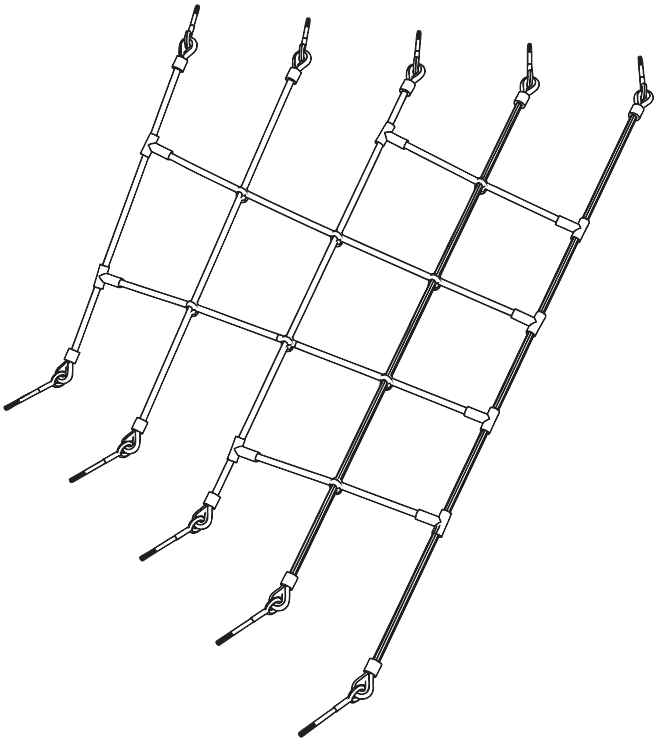

EYEBOLTS

Eyebolts SHOULD always be positioned so the EYE is vertical - SHOWN SOLID BLACK

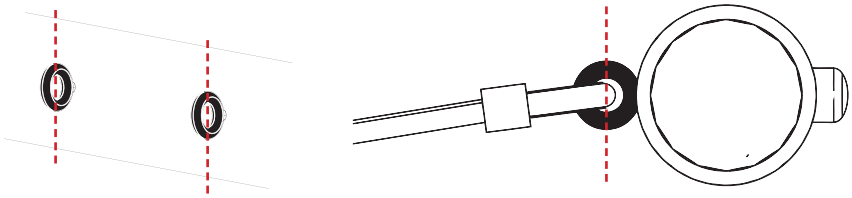

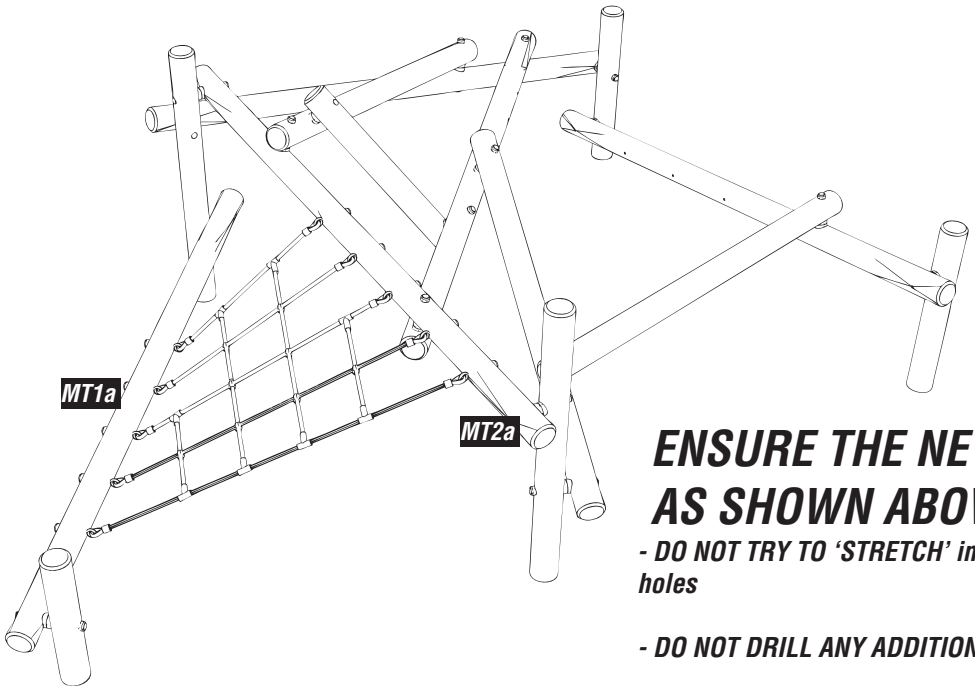

ENSURE THE NET IS ATTACHED AS SHOWN ABOVE:

- DO NOT TRY TO 'STRETCH' into differnt holes

- DO NOT DRILL ANY ADDITIONAL HOLES

The net is a LABELLED 'UPPER' and 'LOWER' UPPER attaches to MT2a TIMBER, LOWER attaches to MT1a TIMBER

18 Attach the NET + BLOCKS (supplied loose)

Using M10 NYLOCS and covered end cap R60

Attach the ROPES FIRST - R1 / R2 / R3 / R4

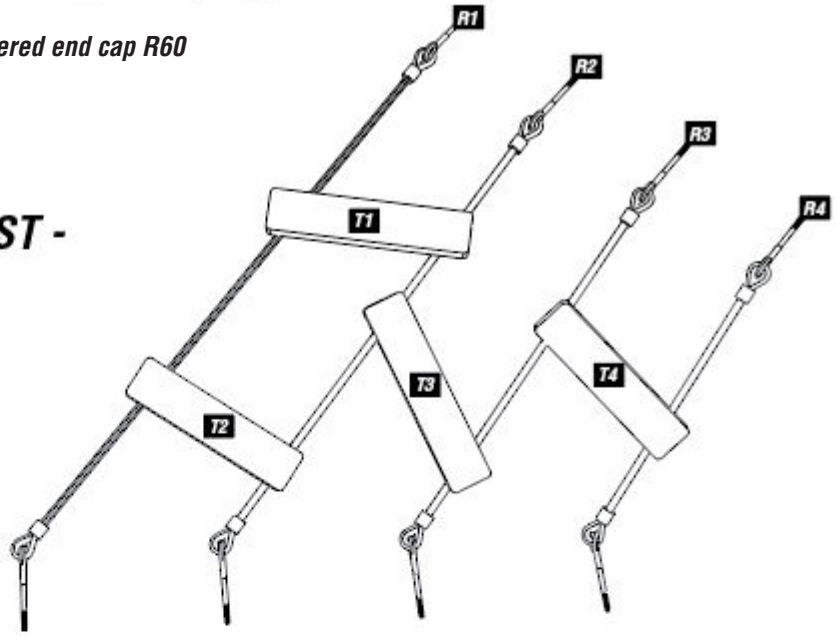

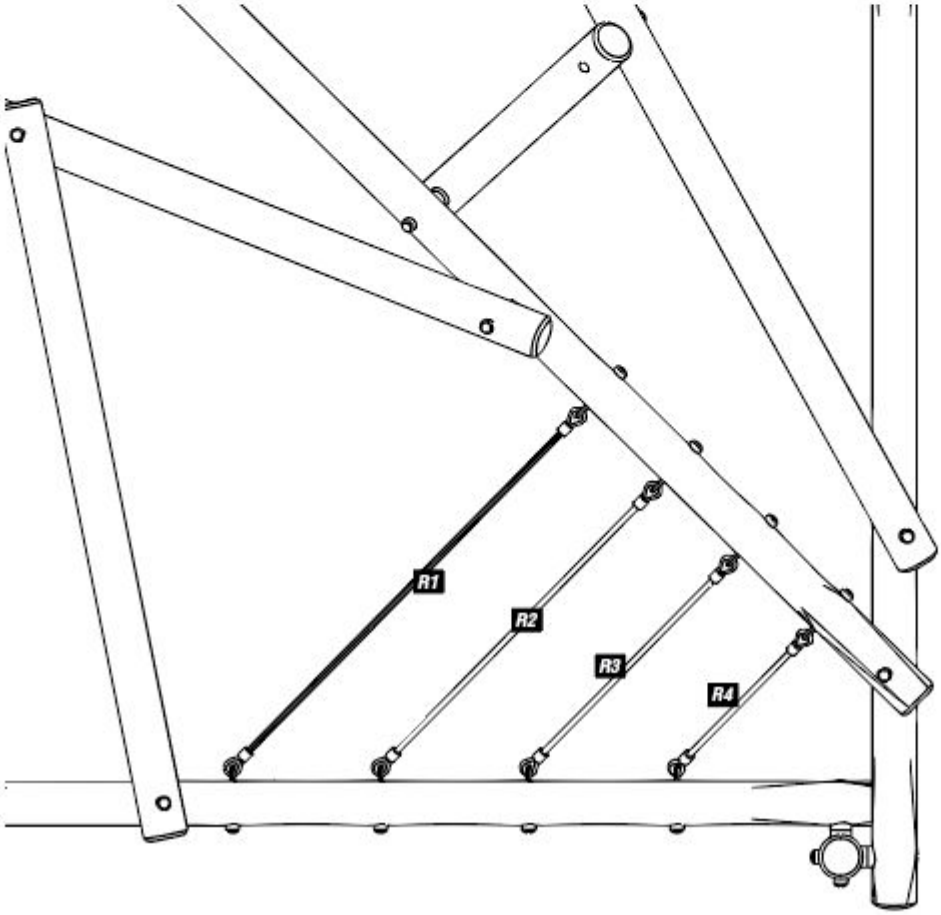

19 Mark the BLOCK LOCATIONS and ATTACH THE BLOCKS

Using POLYFIX HALVES

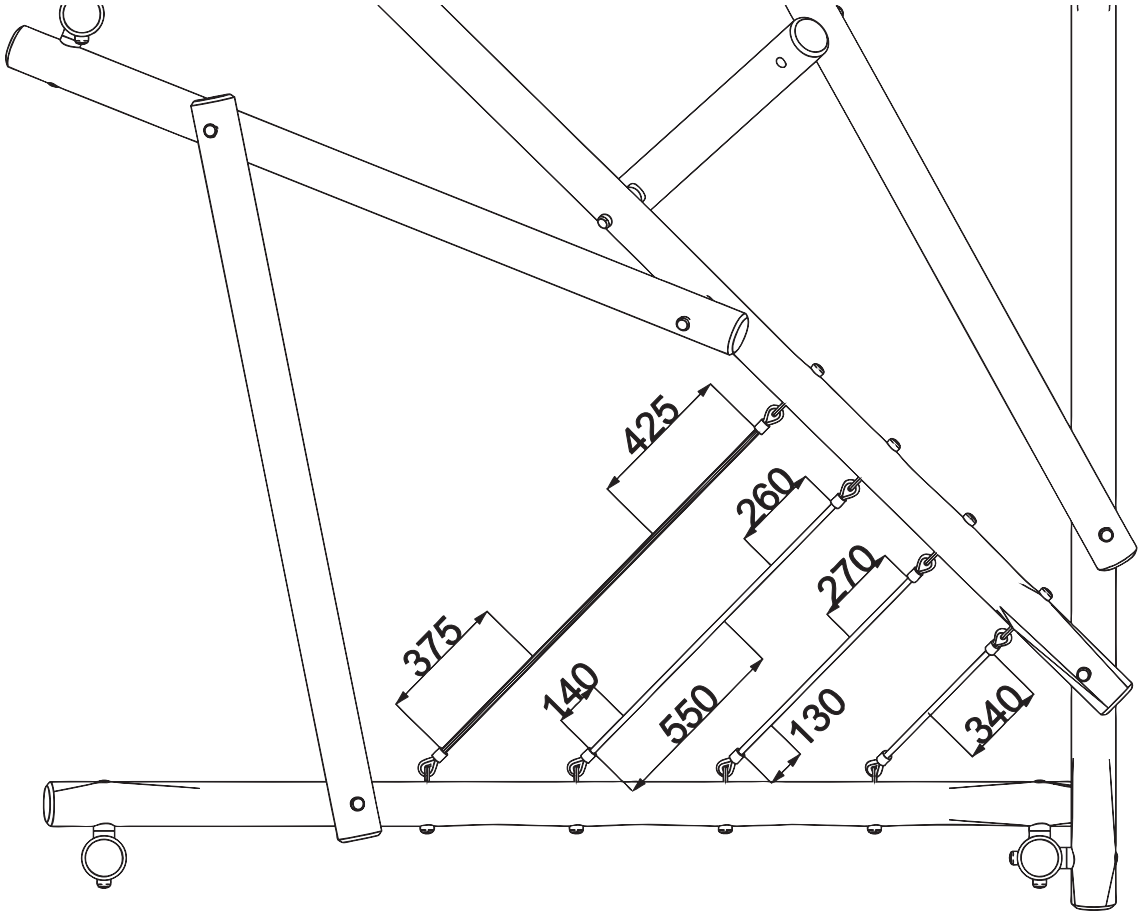

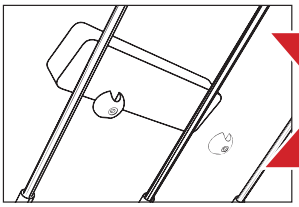

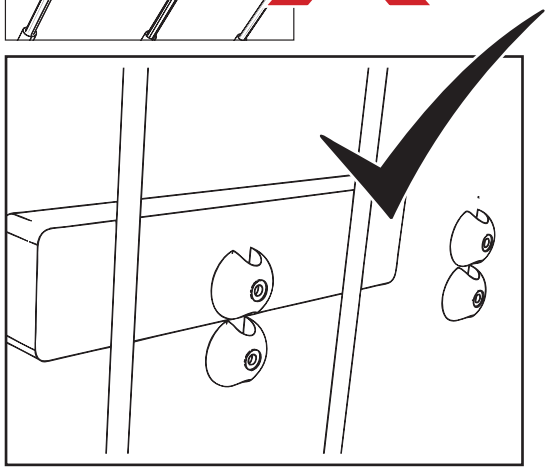

USE 4 x POLYFIX HALF

SCREW FROM 'UNDERNEATH'

EYEBOLTS

Eyebolts 'SHOULD' always be positioned so the 'EYE' is vertical - Shown SOLID BLACK

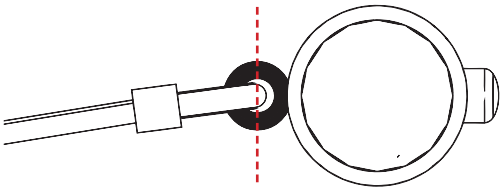

ADDITIONAL DRAWINGS

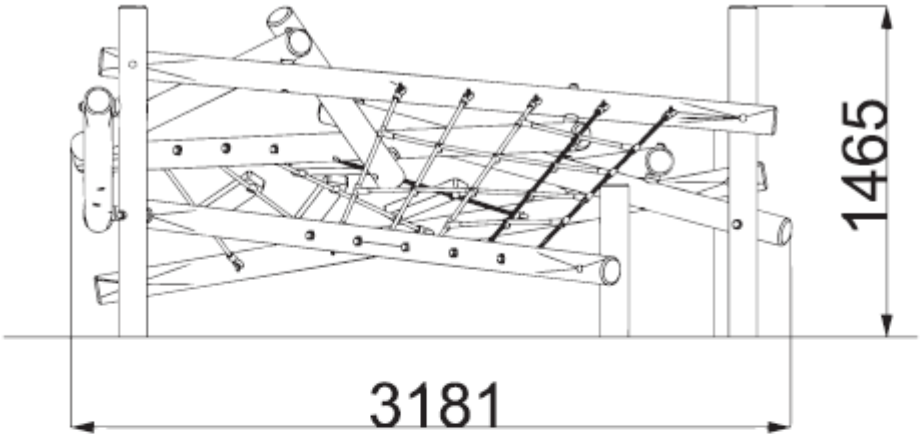

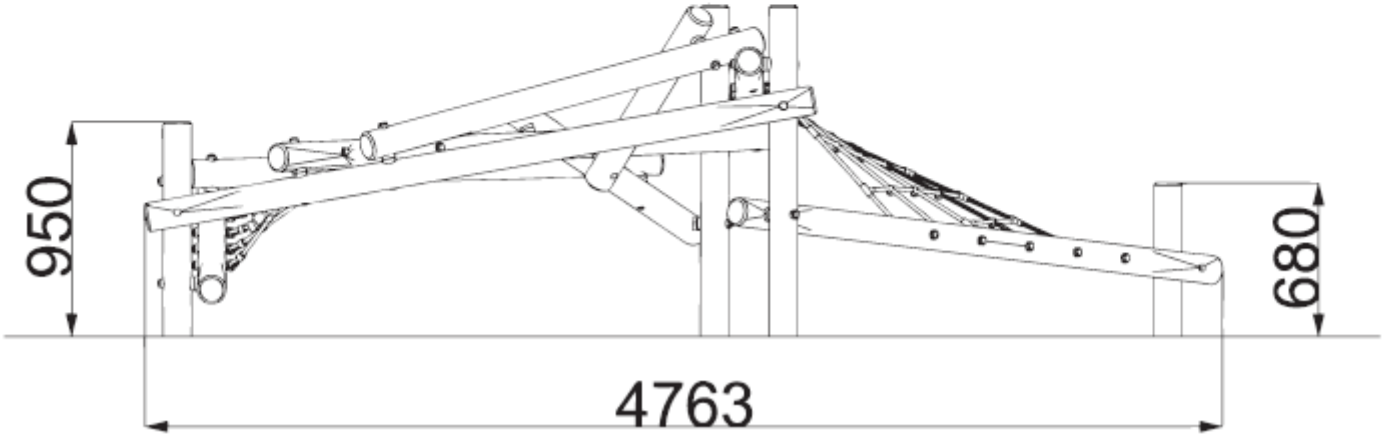
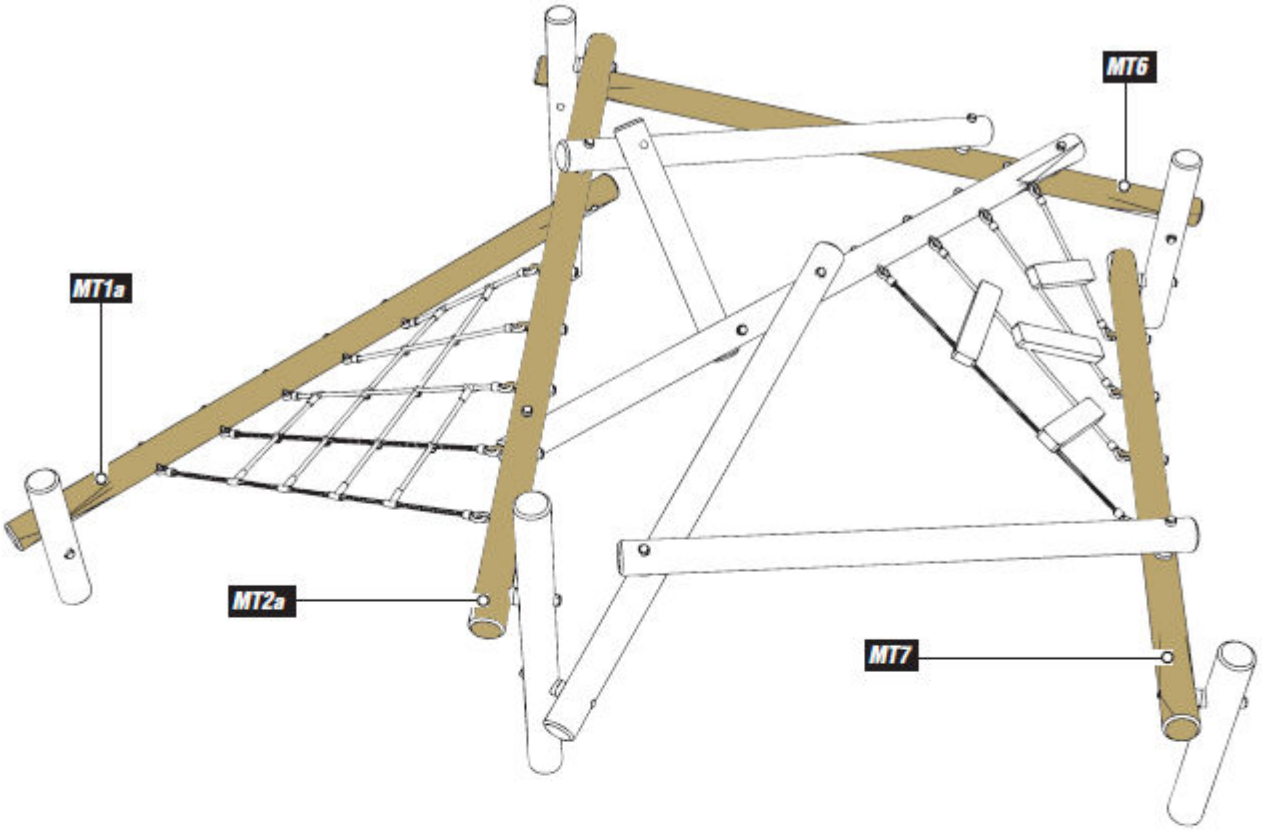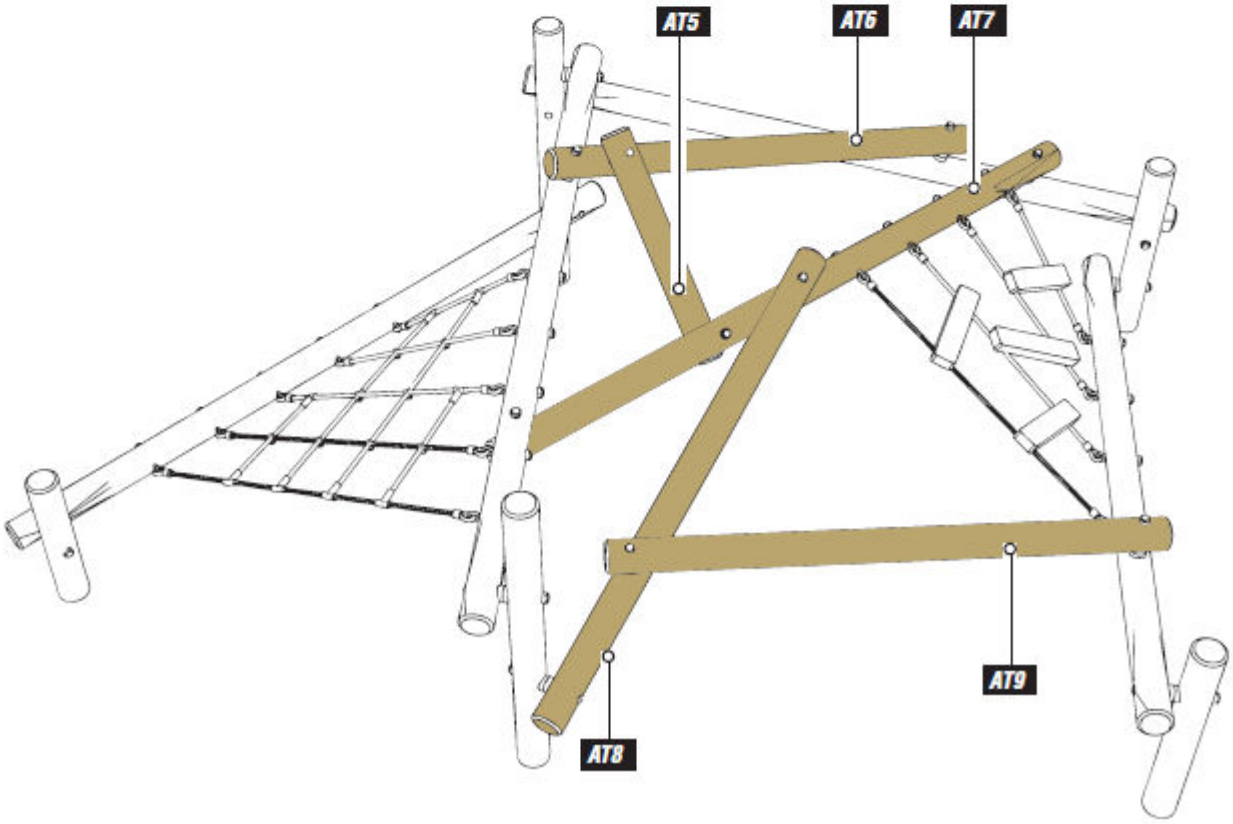
ADDITIONAL DRAWINGS